GV57MG V2(Plus) User Manual

EGPRS/LTE Cat-M1/LTE Cat-NB2/GNSS Tracker

TRACGV57MG V2UM001

V1.03



Driving Smarter IoT

www.queclink.com

Document Title	GV57MG V2(Plus) User Manual
Version	1.03
Date	April 8, 2024
Status	Release
Document Control ID	TRACGV57MG V2UM001

General Notes

Queclink offers this information as a service to its customers, to support application and engineering efforts that use the products designed by Queclink. The information provided is based upon requirements specifically provided to Queclink by the customers. Queclink has not undertaken any independent search for additional relevant information, including any information that may be in the customer's possession. Furthermore, system validation of this product designed by Queclink within a larger electronic system remains the responsibility of the customer or the customer's system integrator. All specifications supplied herein are subject to change.

Copyright

This document contains proprietary technical information which is the property of Queclink Wireless Solutions Co., Ltd. The copying of this document, distribution to others, and communication of the content thereof, are forbidden without express authority. Offenders are liable to the payment of damages. All rights are reserved in the event of a patent grant or registration of a utility model or design. All specifications supplied herein are subject to change without notice at any time.

Queclink Confidential

Contents

Table Index....4
Figure Index....5
History....6
1. Introduction....7
1.1 Reference....7
1.2 Terms and Abbreviations....7
2. Product Overview....8
2.1 Overview....8
2.2 Parts List....8
2.3 Interface Definition....10
3. Getting Started....11
3.1 Installing a SIM Card....11
3.2 USB Interface....13
3.3 UART Interface....14
3.4 Power Connection....16
3.5 Ignition Detection....16
3.6 Digital Input....17
3.7 Digital Output....17
3.8 LED Status....19
3.9 Motion Sensor Direction....20
4. Troubleshooting and Safety Information....22
4.1 Troubleshooting....22
4.2 Safety Information....22

Queclink Confidential

Table Index

Table 1: GV57MG V2(PLUS) Protocol Reference 7
Table 2: Terms and Abbreviations.....7
Table 3: GV57MG V2(Plus) Parts List.....8
Table 4: Description of 5-PIN Connections 10
Table 5: Electrical Characteristics of Ignition Detection.....16
Table 6: Electrical Characteristics of Digital Input.....17
Table 7: Electrical Characteristics of Digital Output.....18
Table 8. Definition of Device Status and LED 19

Queclink Confidential

Figure Index

FIGURE 1. APPEARANCE OF GV57MG V2(PLUS) 8
FIGURE 2. GV57MG V2(PLUS) 5-PIN PITCH CONNECTOR CABLE 10
FIGURE 4. TYPICAL IGNITION DETECTION 16
FIGURE 5.TYPICAL DIGITAL INPUT CONNECTION 17
FIGURE 6. INTERNAL DRIVER CIRCUIT FOR DIGITAL OUTPUT 18
FIGURE 7. TYPICAL CONNECTION WITH A RELAY （MAH-112-C-4D2） 18
FIGURE 8. GV57MG V2(PLUS) LEDS ON THE CASE 19
FIGURE 9. MOTION SENSOR DIRECTION 21

Queclink Confidential

History

Version	Date	Author	Description of Change
1.00	April 27, 2023	Oliver Ding	Initial.
1.01	May 30, 2023	Evie Gao	Modified GV57MGV2 to GV57MG V2.
1.02	December 19, 2023	Oliver Ding	Updated the picture of relay in Chapter 3.7.
1.03	April 8,2024	Mandy Wu	Modified GV57MG V2 to GV57MG V2(Plus) Add GV57MG Plus device picture

Queclink Confidential

1. Introduction

The GV57MG V2(Plus) is a compact GNSS vehicle tracking device that supports EGPRS and LTE Cat M1/NB2. It is designed for a wide variety of applications such as stolen vehicle recovery, motorcycle monitoring, and other basic tracking applications. The built-in GNSS receiver has superior sensitivity and fast initial positioning. The full-featured @Track Air Interface Protocol provides complete documentation, so it's easy to learn system integration. The protocol supports a wide variety of reports including emergency alarms, geo-fence boundary crossings, external power supply monitoring, and position reports.

1.1 Reference

Table 1: GV57MG V2(Plus) Protocol Reference

SN	Document Name	Remark
[1]	GV57MG V2(Plus) @Track Air Interface Protocol	The air protocol interface between GV57MG V2(Plus) and backend server.

1.2 Terms and Abbreviations

Table 2: Terms and Abbreviations

Abbreviation	Description
IN1	Digital Input1
VIN	External DC Power Input
GND	Ground
OUT	Digital Output
IGN	Ignition

Queclink Confidential

2. Product Overview

2.1 Overview

To get started, we recommend to check the parts list first. If anything is missing, please contact your sales representative.



Figure 1. Appearance of GV57MG V2(Plus)

2.2 Parts List

Table 3: GV57MG V2(Plus) Parts List

Name	Picture
GV57MG V2(Plus) Locator	
User Cable	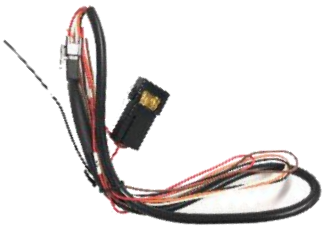

Queclink Confidential

GV57MG V2(Plus) UART Cable (Optional)	
GV57MG V2(Plus) USB Cable (Optional)	

Note: The GV57MG V2(Plus) UART cable and the USB cable are optional accessories and may not be delivered along.

2.3 Interface Definition

The GV57MG V2(Plus) has a 5-PIN pitch connector cable that is used to connect to the power and I/Os. You can find the cable in Figure 2, and its sequence and description in Table 4.

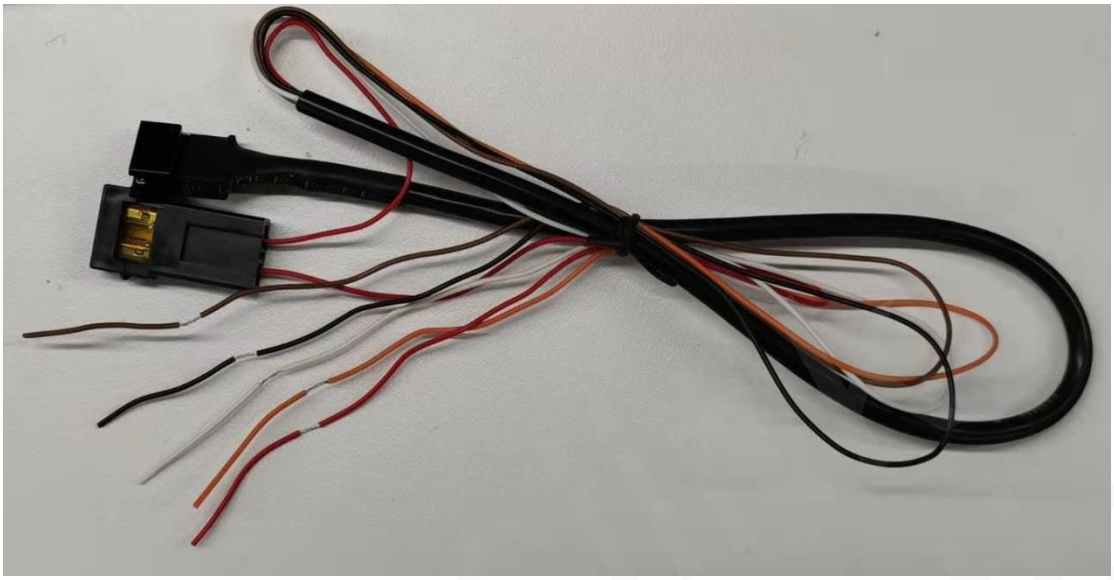

Figure 2. GV57MG V2(Plus) 5-PIN Pitch Connector Cable

Table 4: Description of 5-PIN Connections

Index	Description	Color	Remark
1	IN1	Orange	Digital Input1,negative trigger
2	VIN	Red	External DC Power Input, 8-32V
3	GND	Black	Ground
4	OUT	Brown	Digital Output, open drain, 150mA max
5	IGN	White	Ignition input, positive trigger

Queclink Confidential

3. Getting Started

3.1 Installing a SIM Card

Step 1

Open the top cover.



GV57MG V2



GV57MG Plus

Note: Please unplug the 5-PIN pitch connector cable and make ensure the device isn't powered up. Don't disassemble the device repeatedly, otherwise it may affect the waterproof performance of the device.

Step 2

Make sure the small notch in the corner of the SIM card matches the one in the SIM card tray so that it fits properly. The words or logo on the SIM card should be facing up. Slide the SIM card tray back into the SIM card slot.



GV57MG V2



GV57MG Plus

Step 3

Press to close the top and bottom covers until you hear a snap. Make sure that there is a tight fit between the covers and the seal ring.



GV57MG V2



GV57MG Plus

Step 4

Screw down the device covers.



GV57MG V2



GV57MG Plus

3.2 USB Interface

The GV57MG V2(Plus) has a USB interface that is used for firmware download by using the USB cable.



GV57MG V2



GV57MG Plus

3.3 UART Interface

The GV57MG V2(Plus) has an optional UART cable for configuration. The physical interface used by it is the same as that used by as the USB interface.



GV57MG V2



GV57MG Plus

Note: The UART cable and USB cable of the GV57MG V2(Plus) are oriented when plugged into the corresponding connector. The cables need to be vertically down and the connector direction of the cables needs to be as shown below.



3.4 Power Connection

The PIN 2 (VIN, red) and the PIN 3 (GND, black) are used for power input. The power source you connect to the PINs has to be 8V to 32V for the GV57MG V2(Plus) to work. The device is designed to be installed in vehicles that operate on 12V/24V systems without the need to use external transformers.

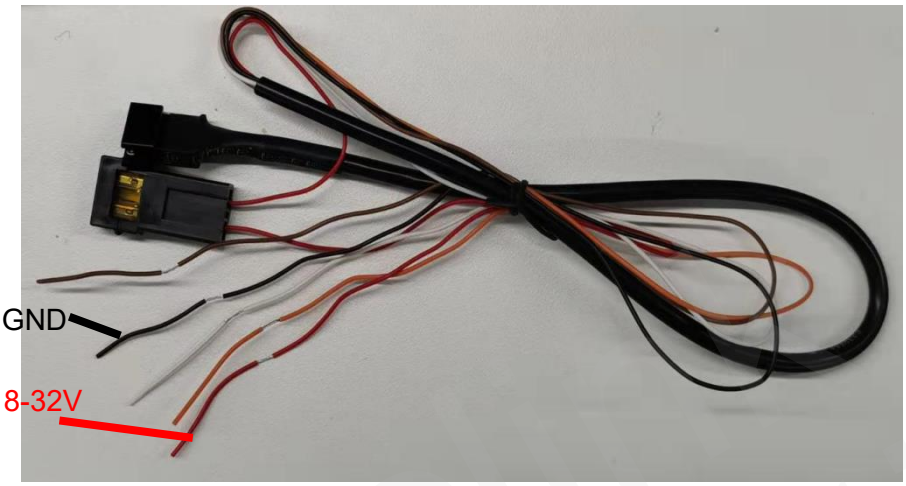

Figure 3. Typical Power Connection

3.5 Ignition Detection

Table 5: Electrical Characteristics of Ignition Detection

Logical Status	Electrical Characteristics
Active	5.0V to 32V
Inactive	0V to 3V or open

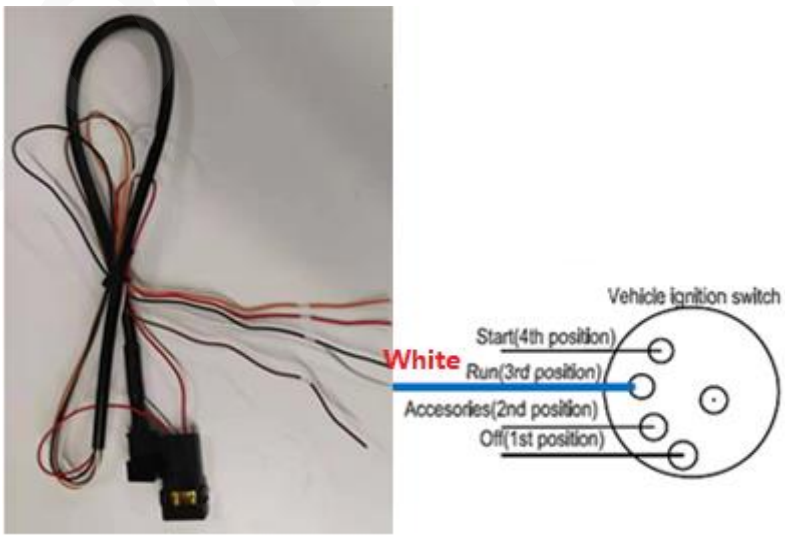

Figure 4. Typical Ignition Detection

The PIN 5 (IGN, white) is used for ignition detection. We recommend that you connect it to the RUN position of the vehicle ignition switch as shown (Figure 4).

If you look for an alternative, we recommend that you find a power source that is available only when the vehicle is started, for example, the power source for the FM radio. The device will send messages to the backend server as the IGN signal completes configuration when the ignition is on, and switch to the power saving mode when the ignition is off.

3.6 Digital Input

There is one general purpose digital input on GV57MG V2(Plus). It is a negative trigger.

Table 6: Electrical Characteristics of Digital Input

Logical Status	Electrical Characteristics
Active	0V to 0.8V
Inactive	Open

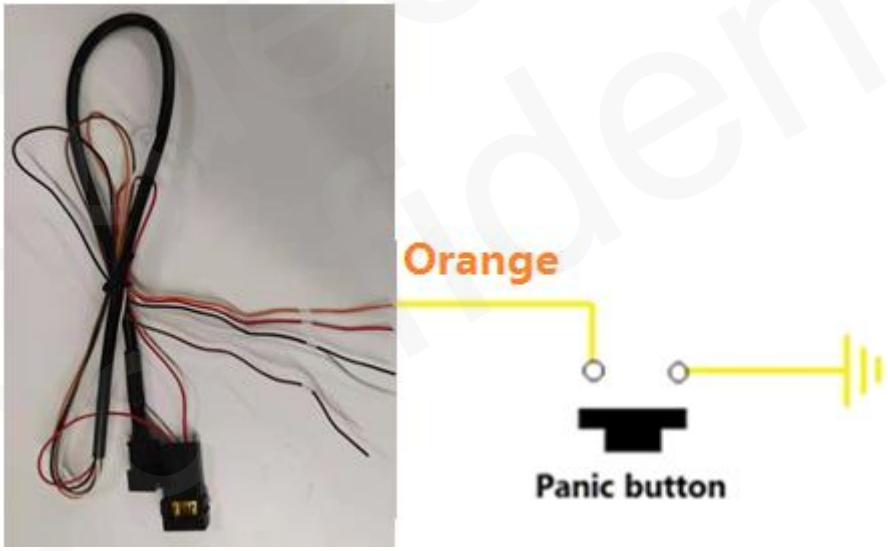

Figure 5.Typical Digital Input Connection

3.7 Digital Output

The PIN 4 (OUT, brown) is an open-drain digital output. The maximum drain current for the device is 150mA.

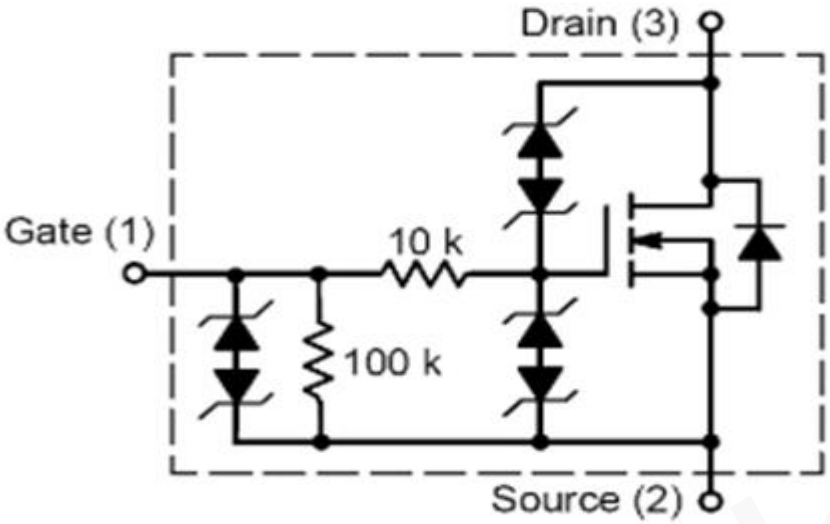

Figure 6. Internal Driver Circuit for Digital Output

Table 7: Electrical Characteristics of Digital Output

Index	Description	Remark
1	Enable	<1.5V @ 150mA
2	Disable	Open drain

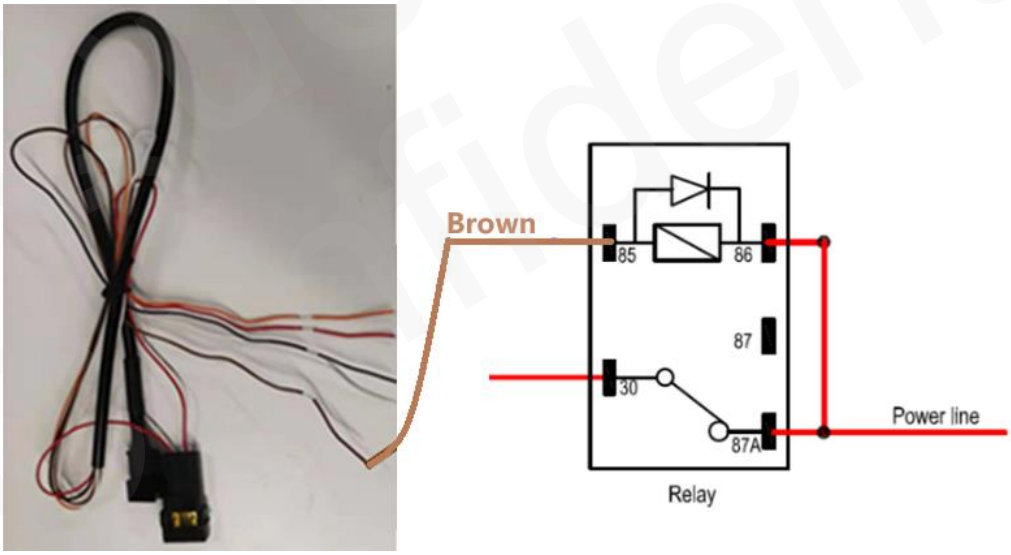

Figure 7. Typical Connection with a Relay（MAH-112-C-4D2）

Note: Many modern relays already have a freewheeling diodes inside. If the relay has such a diode, make ensure the relay is connected with the correct the polarity when using it. If it is not built in, the diode should be added externally to the relay. A common diode such as 1N4004, will work in most cases.

3.8 LED Status

The GV57MG V2(Plus) has two status LEDs that are Cellular LED and GNSS LED respectively.



Figure 8. GV57MG V2(Plus) LEDs on the Case

Table 8. Definition of Device Status and LED

LED	Device Status	LED Status
Cellular LED (Green)	The device is searching for network.	Fast flashing
	The device has been registered to on network.	Slow flashing
	The SIM card needs pin code to unlock.	Solid green
	The device is connected to another device via Bluetooth for the first time, when <*Target Mac Address*> is set by the **AT+GTSVR** command.	2000ms ON/2000ms OFF(last 40s)
GNSS LED (Red)	GNSS is turned off.	OFF
	The device has got GNSS location information.	Solid red
	The device is searching for GNSS signal.	Fast flashing
	GNSS sends no data or data format error occurs.	Slow flashing

Note:

1. The fast flashing of the Cellular LED is about 100ms when the LED indicator is on and 800ms when it is off.

2. The slow flashing of the Cellular LED is about 100ms when the LED indicator is on and

2000ms when it is off.

3. The fast flashing of the GNSS LED is about 100ms when the LED indicator is on and 100ms when it is off.

4. The slow flashing of the GNSS LED is about 600ms when the LED indicator is on and 600ms when it is off.

3.9 Motion Sensor Direction

The GV57MG V2(Plus) has an internal 3-axis accelerometer that supports motion detection. The following screenshot shows the directions of the motion sensor. The z-axis points vertically inward.

Queclink Confidential



Figure 9. Motion Sensor Direction

Queclink Confidential

4. Troubleshooting and Safety Information

4.1 Troubleshooting

Problem	Possible Reason	Solution
The Cellular LED flashes fast all the time when the device is on.	1. The cellular signal strength is weak; Or 2. The device isn't registered on network.	Please place the device in an area with good network coverage.
Messages can't be reported to the backend server.	The IP address or port of the backend server is wrong.	Please check and make sure the IP address is identified by the internet.
The device can't power off.	The device is connected to the power cord (that is external DC power input).	Please disconnect the ignition wire and try again.
The device can't get successful GNSS fix.	The GNSS signal is weak.	1. Please place the device in an open area. Or 2. Let the side without LED indicators face up.

4.2 Safety Information

- Don't disassemble the device by yourself.
- Don't place the device in an environment with high temperature and high humidity. Avoid exposure to direct sunlight. The high temperature will damage the device and even cause a battery explosion.
- Don't use the device on the airplane or near the medical equipment.

Queclink Confidential