# Hillstone SG-6000 A-Series Hardware Reference Guide

Version: V2.0



## About This Guide

Thanks for choosing the network security products from Hillstone Networks.

This document is an installation guide for Hillstone devices to help you install the Hillstone device properly.

For more information, refer to the documentation site: https://docs.hillstonenet.com

To provide feedback on the documentation, please write to us at: TechDocs@hillstonenet.com

## Contact Information:

US Headquarters:

5201 Great America Pkwy, #420

Santa Clara, CA 95054

https://www.hillstonenet.com/about-us/contact/

Hillstone Networks

www.hillstonenet.com

TWNO: TW-HW-AS-EN-V2.0-3/11/2025

# Contents


Contents ..... I

Name and Concentration of Toxic or Hazardous Substances and Elements in Products ..... 20

Welcome ..... 22

Preface ..... 1

About This Manual ..... 1

Document Conventions ..... 1

Chapter 1 Introduction ..... 2

Overview ..... 2

SG-6000-A7600/A6800 ..... 3

Front Panel ..... 3

Back Panel ..... 4

Ports ..... 5

Fixed Ports ..... 5

Management Ports ..... 7

LED ..... 9

Buttons ..... 11

Power Button ..... 12

CLR Button ..... 12

System Parameters ..... 13

Power ..... 14
Power Supply Module View ..... 15
Power Supply Module LED Descriptions ..... 15
SSD ..... 16
Cooling System ..... 17
Available Expansion Module ..... 18
SG-6000-A5800/A5600/A5555/A5255/A5155 ..... 20
Front Panel ..... 20
Back Panel ..... 21
Ports ..... 22
Fixed Ports ..... 22
Management Ports ..... 23
LED ..... 25
Buttons ..... 28
Power Button ..... 28
CLR Button ..... 28
System Parameters ..... 29
Power ..... 30
Power Supply Module View ..... 31
Power Supply Module LED Descriptions ..... 32
SSD ..... 32

Cooling System ..... 34
Available Expansion Module ..... 34
SG-6000-A5500/A5200/A5100 ..... 37
Front Panel ..... 37
Back Panel ..... 38
Ports ..... 39
Fixed Ports ..... 39
Management Ports ..... 40
LED ..... 42
Buttons ..... 45
Power Button ..... 45
CLR Button ..... 45
System Parameters ..... 46
Power ..... 47
Power Supply Module View ..... 48
Power Supply Module LED Descriptions ..... 49
SSD ..... 49
Cooling System ..... 50
Available Expansion Module ..... 51
SG-6000-A3815 ..... 54
Front Panel ..... 54

Back Panel ..... 55
Ports ..... 56
Fixed Ports ..... 56
Management Ports ..... 57
LED ..... 58
Buttons ..... 61
Power Button ..... 61
CLR Button ..... 62
System Parameters ..... 62
Power ..... 63
Power Supply Module View ..... 64
Power Supply Module LED Descriptions ..... 65
SSD ..... 66
Cooling System ..... 67
Available Expansion Module ..... 68
SG-6000-A3800 ..... 70
Front Panel ..... 70
Back Panel ..... 71
Ports ..... 72
Fixed Ports ..... 72
Management Ports ..... 73

LED ..... 75
Buttons ..... 78
Power Button ..... 78
CLR Button ..... 78
System Parameters ..... 79
Power ..... 80
Power Supply Module View ..... 81
Power Supply Module LED Descriptions ..... 82
SSD ..... 82
Cooling System ..... 84
Available Expansion Module ..... 84
SG-6000-A3700 ..... 87
Front Panel ..... 87
Back Panel ..... 88
Ports ..... 89
Fixed Ports ..... 89
Management Ports ..... 90
LED ..... 92
Buttons ..... 95
Power Button ..... 95
CLR Button ..... 95

System Parameters ..... 96
Power ..... 97
SSD ..... 98
Cooling System ..... 99
Available Expansion Module ..... 100
SG-6000-A3615 ..... 102
Front Panel ..... 102
Back Panel ..... 103
Ports ..... 104
Fixed Ports ..... 104
Management Ports ..... 105
LED ..... 107
Buttons ..... 110
Power Button ..... 110
CLR Button ..... 110
System Parameters ..... 111
Power ..... 112
SSD ..... 113
Cooling System ..... 114
Available Expansion Module ..... 115
SG-6000-A3600/A3000 ..... 117

Front Panel ..... 117
Back Panel ..... 118
Ports ..... 119
Fixed Ports ..... 119
Management Ports ..... 120
LED ..... 122
Buttons ..... 125
Power Button ..... 125
CLR Button ..... 125
System Parameters ..... 126
Power ..... 127
SSD ..... 128
Cooling System ..... 129
SG-6000-A2815/A2715 ..... 131
Front Panel ..... 131
Back Panel ..... 132
Ports ..... 133
Fixed Ports ..... 133
Management Ports ..... 134
LED ..... 135
Buttons ..... 138

Power Button ..... 138
CLR Button ..... 139
System Parameters ..... 139
Power ..... 140
SSD ..... 141
Cooling System ..... 142
Available Expansion Module ..... 143
SG-6000-A2800/A2700 ..... 145
Front Panel ..... 145
Back Panel ..... 146
Ports ..... 147
Fixed Ports ..... 147
Management Ports ..... 148
LED ..... 150
Buttons ..... 153
Power Button ..... 153
CLR Button ..... 153
System Parameters ..... 154
Power ..... 155
SSD ..... 156
Cooling System ..... 157

SG-6000-A2600/A2000 ..... 158
Front Panel ..... 158
Back Panel ..... 159
Ports ..... 160
Fixed Ports ..... 160
Management Ports ..... 160
LED ..... 161
Buttons ..... 164
Power Button ..... 165
CLR Button ..... 165
System Parameters ..... 166
Power ..... 167
SSD ..... 167
Cooling System ..... 168
SG-6000-A1605-A ..... 170
Front Panel ..... 170
Back Panel ..... 171
Ports ..... 171
Fixed Ports ..... 172
Management Ports ..... 173
LED ..... 174

System Parameters ..... 177
Power ..... 178
SSD ..... 179
Cooling System ..... 179
SG-6000-A1100 ..... 181
Front Panel ..... 181
Back Panel ..... 182
Ports ..... 182
Fixed Ports ..... 182
Management Ports ..... 183
LED ..... 184
Buttons ..... 186
Power Button ..... 186
CLR Button ..... 186
System Parameters ..... 187
External Power ..... 188
External Power Adapter View ..... 189
SSD ..... 189
Cooling System ..... 190
SG-6000-A1000 ..... 191
Front Panel ..... 191

Back Panel ..... 192
Ports ..... 192
Fixed Ports ..... 192
Management Ports ..... 193
LED ..... 194
Buttons ..... 196
Power Button ..... 196
CLR Button ..... 196
System Parameters ..... 197
External Power ..... 198
External Power Adapter View ..... 198
SSD ..... 199
Cooling System ..... 200
SG-6000-A200/A200W/A200G4B ..... 201
Front Panel ..... 201
Back Panel ..... 202
Ports ..... 203
Fixed Ports ..... 204
Management Ports ..... 205
LED ..... 206
Buttons ..... 207

CLR Button ..... 207
System Parameters ..... 208
External Power ..... 209
External Power Adapter View ..... 210
SSD ..... 210
Cooling System ..... 210
Power Cable ..... 211
AC Power Cable ..... 211
China AC Power Cables ..... 211
AC Power Cables of Other Countries ..... 214
DC Power Cable ..... 222
Expansion Modules ..... 224
Interface Modules ..... 224
IOC-A-2QSFP+ ..... 224
IOC-A-4SFP+ ..... 225
IOC-A-F-4SFP+ ..... 226
IOC-A-F-8SFP+ ..... 227
IOC-A-F-8GE ..... 228
Bypass Module ..... 229
IOC-A-2MM-BE/IOC-A-2SM-BE ..... 230
Connecting Bypass Modules ..... 231

Expansion Module LED Indicators ..... 231
Compatibility of Expansion Modules with Device Models ..... 233
Configuring an Expansion Module ..... 234
Configuring an Interface Module ..... 234
Viewing Information of Expansion Modules ..... 235
Transceiver Module/Copper SFP Module ..... 236
Usage Notes for Transceiver Module ..... 237
Safety Precautions ..... 237
Notes for Cleaning the Optical Fiber Port ..... 238
Cleaning the Fiber Connector End Face ..... 238
Cleaning the Optical Ports of Transceiver Module ..... 239
Supported Versions for Transceiver Module ..... 240
1GE(SFP) Transceiver Module ..... 243
TRAN-SX ..... 243
Transceiver Module View ..... 243
Detailed Specifications ..... 243
TRAN-LX10 ..... 245
Transceiver Module View ..... 245
Detailed Specifications ..... 246
TRAN-LX40 ..... 248
Detailed Specifications ..... 248

TRAN-LX80 ..... 250
Transceiver Module View ..... 250
Detailed Specifications ..... 251
Copper SFP Module ..... 252
TRAN-GC ..... 252
Detailed Specifications ..... 252
10GE(SFP+) Transceiver Modules ..... 254
TRAN-SR-SFP+ ..... 254
Transceiver Module View ..... 254
Detailed Specifications ..... 254
TRAN-LR-SFP+ ..... 256
Transceiver Module View ..... 256
Detailed Specifications ..... 257
TRAN-SFP+-LX40 ..... 259
Transceiver Module View ..... 259
Detailed Specifications ..... 260
TRAN-SFP+-LX80 ..... 261
Transceiver Module View ..... 261
Detailed Specifications ..... 261
40GE(QSFP+)Transceiver Module ..... 263
TRAN-LR-QSFP+ ..... 263

Transceiver Module View ....263
Detailed Specifications ....263
TRAN-SR-QSFP+ ....266
Transceiver Module View ....266
Detailed Specifications ....266
TRAN-QSFP+-SWDM4 ....269
Transceiver Module View ....269
Detailed Specifications ....269
TRAN-QSFP+BiDi ....271
Detailed Specifications ....271
100GE(QSFP28) Transceiver Module ....273
TRAN-LR4-QSFP28 ....273
Transceiver Module View ....273
Detailed Specifications ....273
TRAN-SR4-QSFP28 ....275
Transceiver Module View ....275
Detailed Specifications ....275
TRAN-QSFP28-CWDM4 ....277
Detailed Specifications ....277
Optical Ports Features: Interoperability/Backward Compatibility/Copper SFP Compatibility ....279

Interoperability ..... 279
Backward Compatibility ..... 280
Switching Mode ..... 281
Switching Mode for A Series ..... 281
Copper SFP Compatibility ..... 282
Viewing Information about the Transceiver Modules ..... 284
Chapter 2 Installation Preparations ..... 288
Introduction ..... 288
Installation Site Environment Requirements ..... 288
Temperature/Humidity Requirements ..... 288
Clearness Requirements ..... 289
ESD Prevention ..... 289
EMI Prevention ..... 289
Grounding Requirements ..... 290
Cabinet Requirements ..... 290
Cabinet Size and Clearance Requirements ..... 290
Cabinet Airflow Requirements ..... 290
Rack Requirements ..... 291
Rack Size and Strength ..... 291
Rack Clearance Requirement ..... 291
Rack Mounting Requirements ..... 291

Other Safety Recommendations ..... 292
Verifying the Parts Received ..... 292
Installation Devices/Tools/Cables ..... 292
Chapter 3 Installation ..... 293
Installing the Device on a Workbench ..... 293
Installing the Device on a Rack ..... 294
Installing with a Tray ..... 294
Installing with Auxiliary Bracket ..... 297
Installing with Rack-Mounting Ears ..... 298
Installing with Mounting Rail Assemblies ..... 299
Connecting Cables ..... 305
Connecting the Grounding Cable ..... 305
Connecting the Console Cable ..... 305
Connecting the Ethernet Cable ..... 306
Connecting the Ethernet Copper Cable ..... 306
Connecting the Ethernet Fiber Cable ..... 306
Connecting an AC Power Cable ..... 307
Connecting a DC Power Cable ..... 308
Connecting a Power Adapter ..... 310
Installing the Antenna ..... 310
Verifying Installation ..... 310

Chapter 4 Boot and Configuration ..... 312
Introduction ..... 312
Startup ..... 312
Establishing a Configuration Environment ..... 312
Console (CON) Connection ..... 312
WebUI ..... 313
Telnet or SSH ..... 314
Basic Configuration ..... 314
Connecting to Internet by Using Routing Mode ..... 315
Via PPPoE Dial-up Mode ..... 316
Via Static IP addresses ..... 318
Creating a Wireless Network for Access ..... 320
Shutdown ..... 322
By Removing the Power Cable ..... 323
By Using the Power Button ..... 323
By Using the Shutdown Command ..... 323
Chapter 5 Hardware Maintenance and Replacement ..... 325
Introduction ..... 325
Installing and Removing the Power Supply Module ..... 325
Installing and Removing the Expansion Module ..... 326
Installing and Removing the Fan Tray ..... 328

Installing/Removing/Replacing the SSD ..... 329
Installing an SSD ..... 329
Removing an SSD ..... 332
Replacing an SSD ..... 333
Chapter 6 Troubleshooting ..... 335
Introduction ..... 335
Losing the Administrator Password ..... 335
Troubleshooting Expansion Modules ..... 335
Troubleshooting the Cooling System ..... 336
Troubleshooting the Power System ..... 336
Troubleshooting the Configuration System ..... 336
Change Log ..... 338
Version 2.0 ..... 338
Version 1.0 ..... 338
Appendix: Supported Versions of Devices ..... 339

# Name and Concentration of Toxic or Hazardous Substances and Elements in Products

| Component | Toxic or hazardous substances and elements | | | | | |
|---|---|---|---|---|---|---|
| | Lead | Mercury | Cadmium | Cr6+ | PBB | PDBE |
| Metal parts (including fasteners) | X | O | O | O | O | O |
| Printed circuit board assemblies and components | X | O | O | O | O | O |
| Cables and cable assemblies | X | O | O | O | O | O |
| Plastics and Polymers | X | O | O | O | X | X |
| Electric components other than circuit boards | X | O | O | O | O | O |

O: Indicates that this toxic or hazardous substance in the material is below the limit requirement defined in Requirements for Concentration Limits for Certain Hazardous Substances in Electronic Information Products (SJ/T11363-2006) issued by Ministry of Information Industry of PRC.

X: Indicates that this toxic or hazardous substance in the material exceeds the limit requirement specified in Requirements for Concentration Limits for Certain Hazardous Substances in Electronic Information Products (SJ/T11363-2006) issued by Ministry of Information Industry of PRC.



Note: Not all components in the table are included in one product.

This symbol indicates the environment friendly use period of all products and components.

| Component | Toxic or hazardous substances and elements | | | | | |
|---|---|---|---|---|---|---|
| | Lead | Mercury | Cadmium | Cr6+ | PBB | PDBE |
| The period applies only to the normal operation conditions specified in this manual. | | | | | | |

# Welcome

Thanks for choosing Hillstone products!

This part introduces how you get user guides of Hillstone products.

Hillstone provides the following guides to help you understand our products. Visit https://-docs.hillstonenet.com to download guides.

- Hillstone SG-6000 Hardware Reference Guide
- Hillstone Transceiver Module Reference Guide
- StoneOS WebUI User Guide
- StoneOS CLI User Guide
- StoneOS Cookbook
- StoneOS Getting Started Guide
- StoneOS Log Messages Reference Guide
- StoneOS SNMP MIB Reference Guide
- StoneOS Upgrade Guide
- CloudEdge Deployment Guide

Customer service hotline:

- Regions outside China: 1-800-889-9860
- Hong Kong (China): +852-55128899 (9:00 to 17:00 on every Monday to Friday)

Website: https://www.hillstonenet.com

# Preface

## About This Manual

Thanks for choosing the network security products from Hillstone Networks.

This document is an installation manual for the Hillstone SG-6000 A-Series device to help you install the device properly.

This manual includes the following chapters:

- Introduction
- Installation Preparations
- Installation
- Boot and Configuration
- Hardware Maintenance and Replacement
- Troubleshooting

## Document Conventions

This manual uses the following conventions for your convenience to read and understand:

- **Warning**: Indicates improper operation that may cause serious damage to equipment or injury to operators. Thus, operators must strictly follow the operation rules.
- **Caution**: Indicates incorrect operation that may affect the normal use of the equipment. Operators should be careful.
- **Note**: Indicates information that may help readers understand the content.

# Chapter 1 Introduction

## Overview

Based on the X86 architecture, Hillstone SG-6000 A-Series is a next-generation firewall with high performance, high reliability and high scalability and for the 5G/IOT era. The firewall consists of multiple models whose throughput ranging from 1G to 280G and supporting large local storage capacity by offering a large-capacity hard drive as an option. Besides, it is featured by powerful performance in throughput, security protection, threat detection and prevention, SSL encryption and decryption, and scalability.

Currently, SG-6000 A-Series product models include SG-6000-A7600, SG-6000-A6800,SG-6000-A5800, SG-6000-A5600, SG-6000-A5555, SG-6000-A5500, SG-6000-A5255, SG-6000-A5200, SG-6000-A5155, SG-6000-A5100, SG-6000-A3815, SG-6000-A3800, SG-6000-A3700, SG-6000-A3615, SG-6000-A3600, SG-6000-A3000, SG-6000-A2815, SG-6000-A2800, SG-6000-A2715, SG-6000-A2700, SG-6000-A2600, SG-6000-A2000, SG-6000-A1605-A, SG-6000-A1100, SG-6000-A1000, SG-6000-A200W , SG-6000-A200 and SG-6000-A200G4B.

**Note:** SG-6000-A200G4B device can only be used in Brazil.

# SG-6000-A7600/A6800

The SG-6000-A7600/A6800 device is designed to fit in standard 19-inch cabinets/racks. The mounting rail assemblies are included with the device, They can not only be installed in a standard 19-inch cabinet/rack with a tray or mounting rail assemblies, but also be placed on a workbench.

- Front Panel
- Back Panel
- Ports
- LED
- Buttons
- System Parameters
- Power
- SSD
- Cooling System
- Available Expansion Module

## Front Panel

The front panel of SG-6000-A7600/A6800 consists of 1 power button, 1 SSD expansion slot, 1 CLR button, 2 USB 3.0 ports, 1 Console port, 1 MGT port, one GE SFP HA port ,ports 0-19 are 10GE SFP+ ports (ports 0-7 can be reduced to GE SFP mode), 20-21 port is 40GE QSFP+ port by default (can be switched into 100GE QSFP28 ports), ports 22-23 are 100GE QSFP28 port by default (can be switched into 40GE QSFP+ ports), several LED indicators (1 Power LED, 1 Status LED, 1 Alarm LED, 1 HA Status LED, 2 Power supply LED, 1 SSD LED, and 1 Fan LED), and several air inlets.

Note: Only one set of ports of ports 20-21 and ports 22-23 can be in 40GE QSFP+ mode.

Figure: SG-6000-A7600/A6800 Front Panel

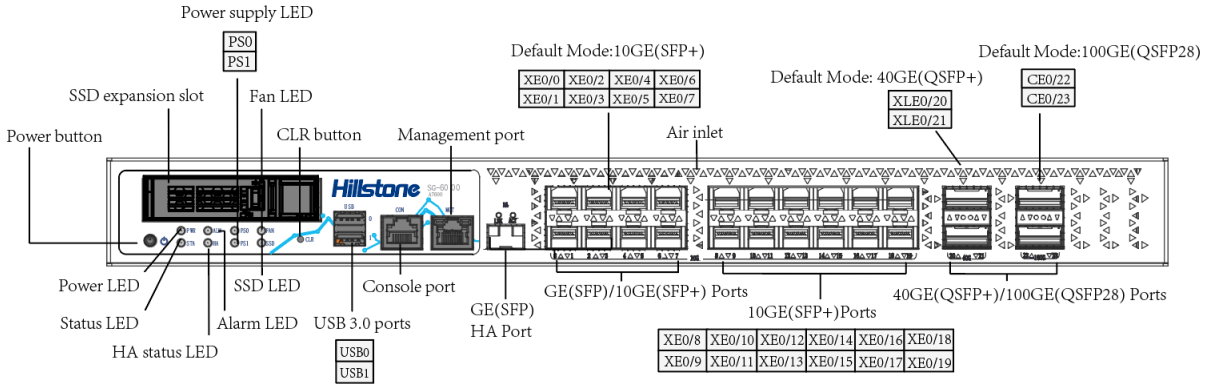


**Related Topics:**

- For instructions of ports, refer to Ports.
- For instructions of LED Indicators on the front panel, refer to LED.
- For information on how to use the power button and CLR button on the front panel, refer to Buttons.

## Back Panel

The back panel of SG-6000-A7600/A6800 consists of 2 power sockets (for removable power supply modules), 2 removable fan trays, 1 general expansion slot, and 1 grounding screw.

Figure: SG-6000-A7600/A6800 Back Panel

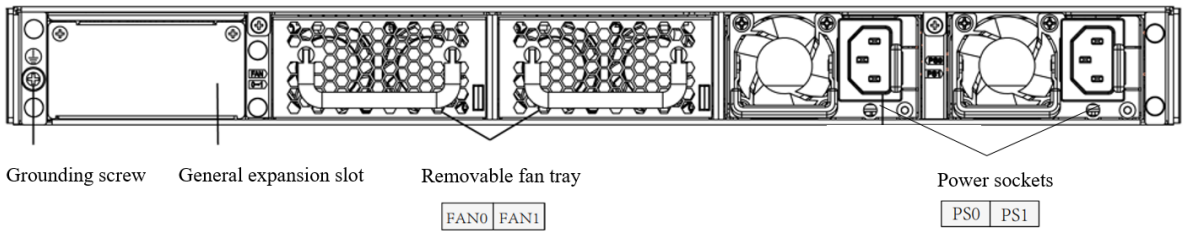


**Related Topics:**

- For information about the expansion modules available for general expansion slot, refer to Available Expansion Module.

## Ports

Note:

- The original Hillstone optical module should not be used together with optical modules from other manufacturers, otherwise some errors may occur.
- Before you use the transceiver module, we strongly recommend that you upgrade the device system to a specified version based on the SN format of the transceiver module. This way, you can prevent the transceiver module from being affected by version incompatibility. See Supported Versions for Transceiver Module.
- To avoid dust falling into the port socket, you should place a rubber dust cap (originally in the accessory box) over the port.

### *Fixed Ports*

The fixed port description of the SG-6000-A7600/A6800 device is shown in the table below.

**Related Topics:**

- For details about mode switching between 40GE (QSFP+) and 100GE(QSFP28) interfaces, see Switching Mode.

Table: Explanation of Corresponding Relationships for Fixed Ports of SG-6000-A7600/A6800

| Port Type/Number | Port Attributes | Compatible Transceiver Modules |
|---|---|---|
| Twenty 10GE SFP+ports | Connector: SFP+<br>Frame Format: Ethernet_II/Ethernet_SNAP<br>Negotiation Mode:<br>• SFP+ optical module: | "10GE(SFP+) Transceiver Modules" on Page 254<br>XE0/0 - XE0/7 can be rate-descreased to 1 Gbps, which uses the"1GE(SFP) Transceiver Mod- |

| Port Type/Number | Port Attributes | Compatible Transceiver Modules |
| --- | --- | --- |
| | 10Gbps<br>• SFP optical module: 1000Mbps<br>• SFP copper module: 1000Mbps, Full-duplex | ule" on Page 243/"Copper SFP Module" on Page 252.<br>**Note:** XE0/8 - XE0/19 do not support rate descrease. |
| Two 40GE QSFP+ ports | Connector: QSFP+<br>Frame Format: Ethernet_II/Ethernet_SNAP<br>Negotiation Mode:<br>• 40GE: 1*40Gbps<br>• 4*10GE: 4*10Gbps | Using the "40GE(QSFP+)Transceiver Module" on Page 263 in the default interface mode.<br>After the interface mode is switched to 100GE(QSFP28), the "100GE (QSFP28) Transceiver Module" on Page 273 is used.<br>**Note:** When the interface uses the TRAN-SR-QSFP+ transceiver module, you cannot use the **channel-speed 10000** command to split into four 10Gbps channels. |
| Two 100GE QSFP28 ports | Connector: QSFP+<br>Frame Format: Ethernet_II/Ethernet_SNAP | Using the "100GE(QSFP28) Transceiver Module" on Page 273in the default interface mode. |

| Port Type/Number | Port Attributes | Compatible Transceiver Modules |
| --- | --- | --- |
| | Negotiation Mode:<br>• QSFP28 optical module: 1000Gbps | After the interface mode is switched to 40GE(QSFP+), the "40GE (QSFP+)Transceiver Module" on Page 263 is used.<br>**Note:** When the interface uses the TRAN-SR-QSFP+ transceiver module, you cannot use the **channel-speed 10000** command to split into four 10Gbps channels. |

### *Management Ports*

The management port description of the SG-6000-A7600/A6800 device is shown in the table below.

Table: Explanation of Corresponding Relationships for Management Ports of SG-6000-A7600/A6800.

| Port Type/Number | Port Attributes | Compatible Transceiver Modules |
| --- | --- | --- |
| 1 MGT port | - | - |
| 1 GE SFP HA port | Connector: SFP<br>Frame Format: Ethernet_II/Ethernet_SNAP | "1GE(SFP) Transceiver Module" on Page 243/"Copper SFP Mod- |

| Port Type/Number | Port Attributes | Compatible Transceiver Modules |
| --- | --- | --- |
| | Negotiation Mode:<br>• SFP optical module: 1000Mbps<br>• SFP copper module: 1000Mbps ,Full-duplex | ule" on Page 252. |
| 1 Console port | The device provides an RS-232C asynchronous serial console port for you to configure the device.<br>Connector: RJ-45<br>Port Standard: RS-232C<br>Baud Rate: 115200 bit/s<br>Services: Connect the CON port to the serial port of a PC and run a terminal emulation program on the PC to configure the device<br>Transmission Medium: Console cable | - |
| 2 USB 3.0ports | Connector: USB Type-A interface<br>Port Standard: USB 3.0 host interface<br>Negotiation Mode:1.1/2.0/3.0 auto-sensing | - |

## LED

The following table describes the meanings of LED on the front panels of SG-6000-A7600/A6800 devices.

Note:

- The STA LED will remain OFF when there is a boot failure caused by OS software damage. Contact your sales representative if this occurs.
- For a port with a bandwidth of 10G/40G/100Gbps, a blinking or solid ACT LED indicates that the port is sending or receiving data.

Table: Front Panel LED Descriptions

| LED | LED Name | Color/Status | Description |
|---|---|---|---|
| PWR | Power LED | Green/Always on | The device power is running normally. |
| | | Orange/Red/Always on | The device power is running abnormally. |
| | | Off | The device is powered off. |
| STA | Status LED | Green/Blinking | The system is running normally. |
| | | Off | The system has not been booted/is booting/has failed to boot. |

| LED | LED Name | Color/Status | Description |
|---|---|---|---|
| ALM | Alarm LED | Red/Always on | The system is sending alarm(s). |
| | | Green/Blinking | The system is waiting. |
| | | Off | The system is running normally. |
| | | Orange/Blinking | The system is using a trial license. |
| | | Orange | The trial license has expired and there is no legitimate license installed in the system. |
| PS0, PS1 (Dual power supply) | Power supply LED | PS0: Green/Always on PS1: Green/Always on | Power Supply PS0 and PS1 are running normally. |
| | | PS0: Green/Always on, PS1: Red/Always on | Power Supply PS0 is running normally, Power Supply PS1 is powered off or has failed. |
| | | PS0: Red/Always on, PS1: Green/Always on | Power Supply PS0 is powered off or has failed, Power Supply PS1 is running normally. |
| | | PS0: Off, PS1: Off | Power Supply PS0 and PS1 are powered off or have failed. |
| HA | HA LED | Green/Always on | Not using HA. This device is the master device. |
| | | Green/Blinking | Two devices are in an HA cluster. This device is working as the master. |

| LED | LED Name | Color/Status | Description |
|---|---|---|---|
| | | Orange/Blinking | Two devices are in an HA cluster. This device is working as the slave. |
| | | Red/Blinking | HA function has failed. |
| FAN | FAN LED | Green/Always on | The cooling system is running normally. |
| | | Red/Always on | One of the fans has failed or one of the fan trays is not present. |
| SSD | SSD LED | Green/Blinking | SSD is transmitting data. |
| | | Off | SSD is not present or no data is transmitted. |
| LNK | LNK LED | Green/Always on | The link between this port and its peer device is in normal status. |
| | | Off | The link between this port and its peer device has failed or there is no connection. |
| ACT | ACT LED | Orange/Blinking | The port is sending or receiving data. |
| | | Off | No data is transmitted on this port. |

## Buttons

SG-6000-A7600/A6800device includes two buttons, namely the power button and the CLR button.

### *Power Button*

The power button on the front panel of the SG-6000-A7600/A6800 is used for shutting down and restarting after shutting down.

- Shutdown: Long press the power button for about 5 seconds. When the PWR LED changes from blinking green to red or orange and the blue power button indicator is off, system is shut down and the power cord can be removed.
- Restart: After being connected to the power supply by the power cord for the first time, the device will automatically start up. If the device is shut down by pressing the power button or using the shutdown command, and the power cord has not been disconnected after shutdown, you can press the power button to power on the device.

### *CLR Button*

The CLR button on the front panel of SG-6000-A7600/A6800 is the pinhole of the front panel and is used to reset the device back to the factory default settings. You can restore access to the device with this button if the login password is lost.

**Note:** Use this button with caution. Resetting the device will clear all existing configurations.

To restore the factory default settings, take the following steps:

1. After powering on the device, when the system is in operation, use a pin to gently press the CLR button in the pinhole.
2. Wait for the CON port to print the message "Clear button is pressed, the machine will power down," and observe that the STA and ALM LEDs both turn to a solid red. Once the STA and ALM LEDs go out, the device will restart, and during the startup process, the CON port will print the message "CLR button pressed."
3. Once the restart is completed, the factory settings will be restored.

## System Parameters

The following table lists the system parameters of SG-6000-A7600/A6800.

Table: System Parameters of SG-6000-A7600/A6800

| Item | Description |
|---|---|
| **System Parameters** | |
| Flash Memory | 64GB |
| **Dimensions and Weight** | |
| Height | 1U |
| Dimensions (W×D×H)<br>**Note:**In the data, the width of the device does not include that of rack-mounting ear; the depth of the device does not include that of front and back captive screw and washer; the height of the device does not include that of foot pad. | W436.0mm * D542.0mm * H44.0mm |
| Weight | Net weight: 10.9kg<br>Gross weight:15.5kg (accessories and packages included) |
| **Rated Power Consumption** | |
| Rated Power Consumption | 310W |
| **Environmental Parameters** | |
| Ambient Temperature | 0℃~40℃ |

| Item | Description |
| --- | --- |
| Relative Humidity | 10%~95% (non-condensing) |

## Power

SG-6000-A7600/A6800 use hot-swappable AC and DC power supply modules, which are connected to the corresponding external power supply via power cables and can be replaced at any time. Various power supply specifications are available, allowing you to choose DC/AC dual power products as needed.

Dual power supply (1+1 redundancy) : When two power supplies are connected at the same time, the two power supplies work simultaneously. If one power supply fails during operation, the other power supply takes over all the work to prevent losses caused by power failure. The two power supplies are mutually backup.

**Related Topics:**

- For instructions on how to install and remove power supply modules, refer to"Installing and Removing the Power Supply Module" on Page 325.
- For instructions on connecting the power supply module's power cable, refer to "Power Cable" on Page 211.

Table: Power Supplies of SG-6000-A7600/A6800

| Power Supply Specification | Power Supply Type | Input Voltage Range | Maximum Output Power of a Single Power Supply |
| --- | --- | --- | --- |
| Dual (1+1 redundancy) AC (default)<br>Dual (1+1 redundancy) DC (optional) | Power Module | AC: 100~240V AC, 50/60Hz and HVDC: 180~300 HVDC<br>DC: -36 ~ -72V DC | 550W |

## *Power Supply Module View*

SG-6000-A7600/A6800 device uses AC power module and DC power module as shown in the following figure.

AC Power Supply Module (C14 interface) View:

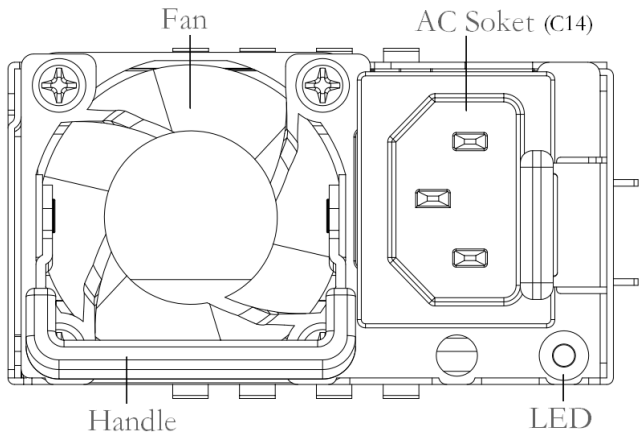


DC Power Supply Module View:

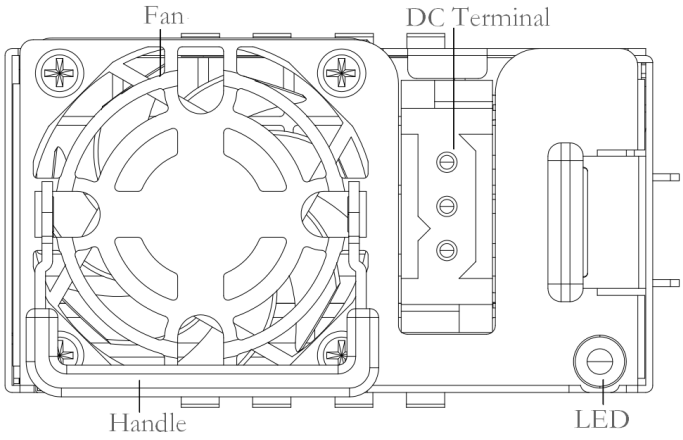


## *Power Supply Module LED Descriptions*

Table: Power Supply Module of SG-6000-A7600/A6800 LED Descriptions

| LED | Color/Status | Description |
|---|---|---|
| AC LED | Green/Always on | AC power module is functioning normally. |
| | Off | AC power module is powered off or has failed. |
| DC LED | Green/Always on | DC power module is functioning normally. |
| | Off | AC power module is powered off or has failed. |

## SSD

SSD on the device is mainly used for saving logs to the local for device monitoring, behavior auditing, etc.

SG-6000-A7600/A6800 provide a hard disk expansion slot. The device does not come with a hard disk; you can purchase and install hard disks with different storage capacitiesas needed.

SSD View:

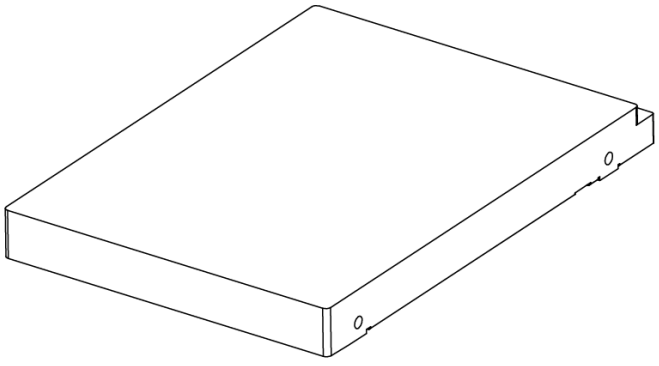

Table: SSD Types and Storage Capacity

| Type | Size | Storage Capacity |
|---|---|---|
| SSD | 2.5 inches | 3.84T/1.92T/960G/480G |

**Related Topics:**

- For instructions on installing the SSD, refer to "Installing/Removing/Replacing the SSD" on Page 329.

**Note:** The device only supports the original Hillstone SSD. Installing a non-original SSD may cause abnormal running of the device. Only certain models have an SSD installed in place in the factory. To purchase an original SSD, contact your sales representative.

## Cooling System

SG-6000-A7600/A6800 device has 2 removable fan trays. The air inlet of the cooling system is located on the front panel. The air that passes through the device will be discharged from the air outlet on the back panel. To ensure the cooling system works normally, leave adequate space around the device.

Figure: Air Circulation

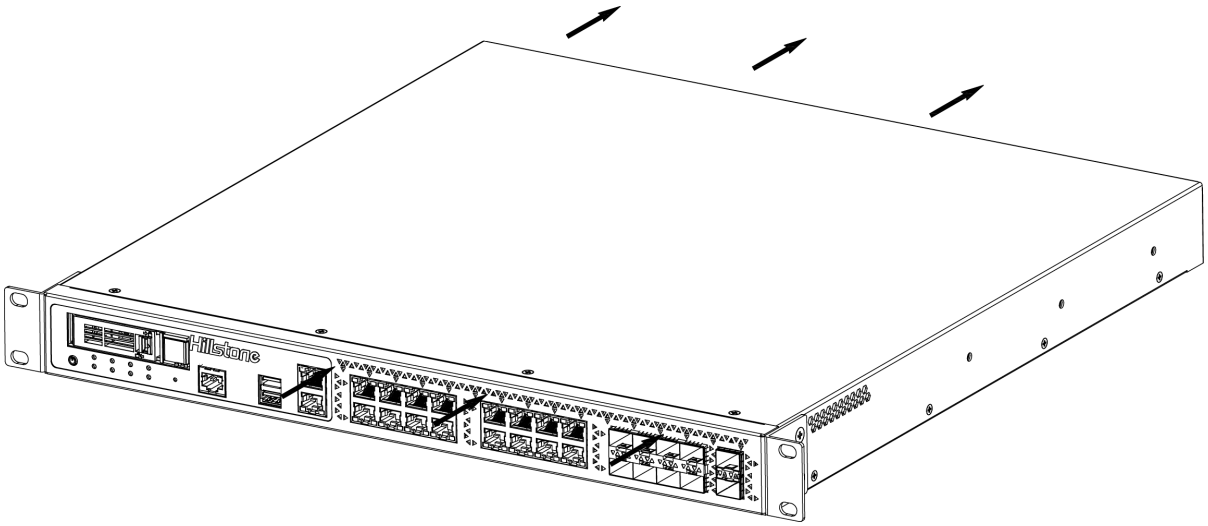


The ambient temperature should be kept between 0 and 40 degrees Celsius. If a fan works abnormally, the FAN LED will turn solid red, and then you should replace the fan/fan tray with a new one.

**Note:** The persistent abnormal fan will cause the system to be unable to dissipate heat in time. If the internal temperature is too high, the system will power off and the current configurations will not be saved.

## Available Expansion Module

The back panel of SG-6000-A7600/A6800 provides a expansion slot. The following table lists the supported expansion modules and the compatible transceiver modules. To use a supported expansion module, install the module into the device's expansion slot.

**Related Topics:**

- For a detailed introduction to the expansion module, refer to"Expansion Modules" on Page 224.
- For instructions on how to install and remove expansion modules, refer to "Installing and Removing the Expansion Module" on Page 326.

| Available Types of Expansion Modules | Expansion Module Models | Compatible Transceiver Modules |
|---|---|---|
| Interface module | IOC-A-2QSFP+ (Without Bypass) | "40GE(QSFP+)Transceiver Module" on Page 263<br><br>**Note:** When the expansion module uses the TRAN-SR-QSFP+ transceiver module, you cannot use the **channel-speed 10000** command to |

| Available Types of Expansion Modules | Expansion Module Models | Compatible Transceiver Modules |
| --- | --- | --- |
| | | split into four 10Gbps channels. |
| | IOC-A-4SFP+ (Without Bypass) | "10GE(SFP+) Transceiver Modules" on Page 254<br>Use the "1GE(SFP) Transceiver Module" on Page 243/"Copper SFP Module" on Page 252after speed reduction.<br>**Note:** The transceiver modules TRAN-SFP+-LX40 and TRAN-SFP+-LX80 are not supported. |
| Bypass module | IOC-A-2MM-BE<br>IOC-A-2SM-BE | - |

# SG-6000-A5800/A5600/A5555/A5255/A5155

SG-6000-A5800/A5600/A5555/A5255/A5155 device is designed to fit in standard 19-inch cabinets/racks. The mounting rail assemblies are included with the device, They can not only be installed in a standard 19-inch cabinet/rack with a tray or mounting rail assemblies, but also be placed on a workbench.

- Front Panel
- Back Panel
- Ports
- LED
- Buttons
- System Parameters
- Power
- SSD
- Cooling System
- Available Expansion Module

## Front Panel

The front panel of SG-6000-A5800/A5600/A5555/A5255/A5155 consists of 1 power button, 1 SSD expansion slot, 1 CLR button, 2 USB 3.0 ports, 1 Console port, 1 MGT port, one GE SFP HA port, ports 0-7 are GE RJ45 ports (ports 0/1, ports 2/3, ports 4/5, and ports 6/7 are bypassed to each other), ports 8-23 are 10GE SFP+ ports, ports 24-25 are 40GE QSFP+ ports, several LED indicators (1 Power LED, 1 Status LED, 1 Alarm LED, 1 HA Status LED, 2 Power supply LED, 1 SSD LED, and 1 Fan LED), and several air inlets.

Figure: SG-6000-A5800/A5600/A5555/A5255/A5155 Front Panel

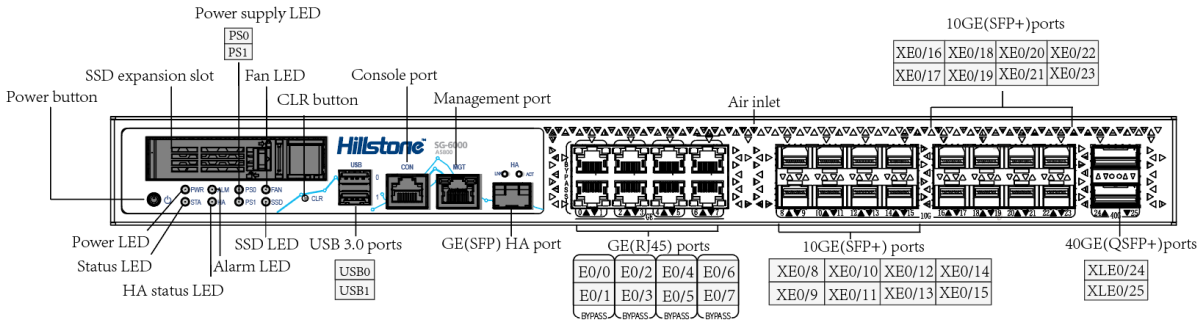


**Related Topics:**

- For instructions of ports, refer to Ports.
- For instructions of LED Indicators on the front panel, refer to LED.
- For information on how to use the power button and CLR button on the front panel, refer to Buttons.

## Back Panel

The back panel of SG-6000-A5800/A5600/A5555/A5255/A5155 consists of 2 power sockets (for removable power supply modules), 2 removable fan trays, 1 general expansion slot, and 1 grounding screw.

Figure: SG-6000-A5800/A5600/A5555/A5255/A5155 Back Panel

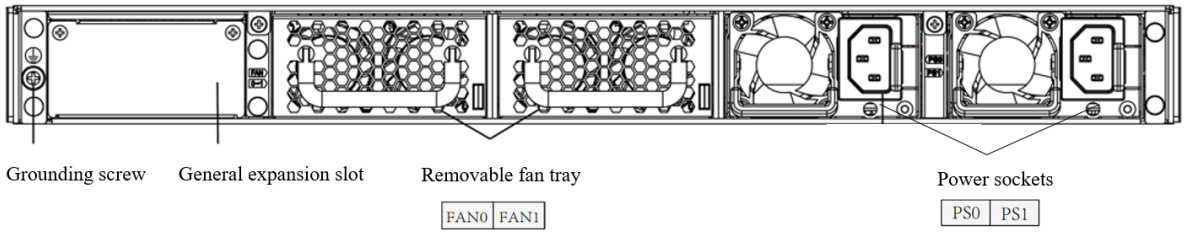


**Related Topics:**

- For information about the expansion modules available for general expansion slot, refer to Available Expansion Module.

## Ports

Note:

- The original Hillstone optical module should not be used together with optical modules from other manufacturers, otherwise some errors may occur.
- Before you use the transceiver module, we strongly recommend that you upgrade the device system to a specified version based on the SN format of the transceiver module. This way, you can prevent the transceiver module from being affected by version incompatibility. See Supported Versions for Transceiver Module.
- To avoid dust falling into the port socket, you should place a rubber dust cap (originally in the accessory box) over the port.

### *Fixed Ports*

Explanation of Corresponding Relationships for Fixed Ports of SG-6000-A5800/A5600/A5555/A5255/A5155.

Table: Explanation of Corresponding Relationships for Fixed Ports of SG-6000-A5800/A5600/A5555/A5255/A5155

| Port Type/Number | Port Attributes | Compatible Transceiver Modules |
|---|---|---|
| eight GE(RJ45) ports (2 pairs of bypass) | Connector: RJ-45<br>Port Standard: Auto-MDI/MDIX (crossover cable and straight-through cable autosensing)<br>Frame Format: Ethernet_II/Ethernet_SNAP<br>Negotiation Mode: | - |

| Port Type/Number | Port Attributes | Compatible Transceiver Modules |
|---|---|---|
| | 10/100/1000Mbps autosensing, Full/half-duplex | |
| Sixteen 10GE SFP+ports | Connector: SFP+<br>Frame Format: Ethernet_II/Ethernet_SNAP<br>Negotiation Mode:<br>• SFP+ optical module: 10Gbps<br>• SFP optical module: 1000Mbps<br>• SFP copper module: 1000Mbps, Full-duplex | "10GE(SFP+) Transceiver Modules" on Page 254<br>Use the "1GE(SFP) Transceiver Module" on Page 243/"Copper SFP Module" on Page 252at a reduced speed of 1Gbps. |
| Two 40GE QSFP+ ports | Connector: QSFP+<br>Frame Format: Ethernet_II/Ethernet_SNAP<br>Negotiation Mode:<br>• 40GE: 1*40Gbps<br>• 4*10GE: 4*10Gbps | "40GE(QSFP+)Transceiver Module" on Page 263 |

### *Management Ports*

The management port description of the SG-6000-A5800/A5600/A5555/A5255/A5155 device is shown in the table below.

Table: Explanation of Corresponding Relationships for Management Ports of SG-6000-A5800/A5600/A5555/A5255/A5155

| Port Type/Number | Port Attributes | Compatible Transceiver Modules |
|---|---|---|
| 1 MGT port | - | - |
| 1 GE SFP HA port | Connector: SFP<br>Frame Format: Ethernet_II/Ethernet_SNAP<br>Negotiation Mode:<br>• SFP optical module: 1000Mbps<br>• SFP copper module: 1000Mbps ,Full-duplex | "1GE(SFP) Transceiver Module" on Page 243/"Copper SFP Module" on Page 252 |
| 1 Console port | The device provides an RS-232C asynchronous serial console port for you to configure the device.<br>Connector: RJ-45<br>Port Standard: RS-232C<br>Baud Rate: 115200 bit/s<br>Services: Connect the CON port to the serial port of a PC and run a terminal emulation program on the PC to configure the device<br>Transmission Medium: Console cable | - |

| Port Type/Number | Port Attributes | Compatible Transceiver Modules |
|---|---|---|
| 2 USB 3.0ports | Connector: USB Type-A interface<br>Port Standard: USB 3.0 host interface<br>Negotiation Mode:1.1/2.0/3.0 auto-sensing | - |

## LED

The following table describes the meanings of LED indicators on the front panels of SG-6000-A5800/A5600/A5555/A5255/A5155 devices.

Note:

- The STA LED will remain OFF when there is a boot failure caused by OS software damage. Contact your sales representative if this occurs.
- For a port with a bandwidth of 10G/40G/100Gbps, a blinking or solid ACT LED indicates that the port is sending or receiving data.

Table: Front Panel LED Descriptions of SG-6000-A5800/A5600/A5555/A5255/A5155

| LED | LED Name | Color/Status | Description |
|---|---|---|---|
| PWR | Power LED | Green/Always on | The device power is running normally. |
| | | Orange/Red/Always on | The device power is running abnormally. |
| | | Off | The device is powered off. |

| LED | LED Name | Color/Status | Description |
|---|---|---|---|
| STA | Status LED | Green/Blinking | The system is running normally. |
| | | Off | The system has not been booted/is booting/has failed to boot. |
| ALM | Alarm LED | Red/Always on | The system is sending alarm(s). |
| | | Green/Blinking | The system is waiting. |
| | | Off | The system is running normally. |
| | | Orange/Blinking | The system is using a trial license. |
| | | Orange | The trial license has expired and there is no legitimate license installed in the system. |
| PS0, PS1 (Dual power supply) | Power LED | PS0: Green/Always on PS1: Green/Always on | Power Supply PS0 and PS1 are running normally. |
| | | PS0: Green/Always on, PS1: Red/Always on | Power Supply PS0 is running normally, Power Supply PS1 is powered off or has failed. |
| | | PS0: Red/Always on, PS1: Green/Always on | Power Supply PS0 is powered off or has failed, Power Supply PS1 is running normally. |
| | | PS0: Off, PS1: Off | Power Supply PS0 and PS1 are powered off or have failed. |
| HA | HA LED | Green/Always on | Not using HA. This device is the master device. |

| LED | LED Name | Color/Status | Description |
|---|---|---|---|
| | | Green/Blinking | Two devices are in an HA cluster. This device is working as the master. |
| | | Orange/Blinking | Two devices are in an HA cluster. This device is working as the slave. |
| | | Red/Blinking | HA function has failed. |
| FAN | FAN LED | Green/Always on | The cooling system is running normally. |
| | | Red/Always on | One of the fans has failed or one of the fan trays is not present. |
| SSD | SSD LED | Green/Blinking | SSD is transmitting data. |
| | | Off | SSD is not present or no data is transmitted. |
| LNK | LNK LED | Green/Always on | The link between this port and its peer device is in normal status. |
| | | Off | The link between this port and its peer device has failed or there is no connection. |
| ACT | ACT LED | Orange/Blinking | The port is sending or receiving data. |
| | | Off | No data is transmitted on this port. |

## Buttons

SG-6000-A5800/A5600/A5555/A5255/A5155 device includes two buttons, namely the power button and the CLR button.

### *Power Button*

The power button on the front panel of the SG-6000-A5800/A5600/A5555/A5255/A5155 is used for shutting down and restarting after shutting down.

- Shutdown: Long press the power button for about 5 seconds. When the PWR LED changes from blinking green to red or orange and the blue power button indicator is off, system is shut down and the power cord can be removed.
- Restart: After being connected to the power supply by the power cord for the first time, the device will automatically start up. If the device is shut down by pressing the power button or using the shutdown command, and the power cord has not been disconnected after shutdown, you can press the power button to power on the device.

### *CLR Button*

The CLR button on the front panel of SG-6000-A5800/A5600/A5555/A5255/A5155 is the pin-hole of the front panel and is used to reset the device back to the factory default settings. You can restore access to the device with this button if the login password is lost.

**Note:** Use this button with caution. Resetting the device will clear all existing configurations.

To restore the factory default settings, take the following steps:

1. After powering on the device, when the system is in operation, use a pin to gently press the CLR button in the pinhole.
2. Wait for the CON port to print the message "Clear button is pressed, the machine will power down," and observe that the STA and ALM LEDs both turn to a solid red. Once the STA

and ALM LEDs go out, the device will restart, and during the startup process, the CON port will print the message "CLR button pressed."

3. Once the restart is completed, the factory settings will be restored.

## System Parameters

The following table lists the system parameters of SG-6000-A5800/A5600/A5555/A5255/A5155:

Table: System Parameters of SG-6000-A5800/A5600/A5555/A5255/A5155

| Item | | Description |
|---|---|---|
| **System Parameters** | | |
| Flash Memory | | 64GB |
| **Dimensions and Weight** | | |
| Height | | 1U |
| Dimensions (W × D × H)<br>**Note:**In the data, the width of the device does not include that of rack-mounting ear; the depth of the device does not include that of front and back captive screw and washer; the height of the device does not include that of foot pad. | | W436.0mm * D542.0mm * H44.0mm |
| Weight | | Net weight: 10.2kg<br>Gross weight:14.8kg (accessories and packages included) |
| **Rated Power Consumption** | | |
| Rated Power | SG-6000-A5800/A5600 | 300W |

| Item | | Description |
|---|---|---|
| Consumption | | |
| | SG-6000-A5555/A5255 /A5155 | 280W |
| **Environmental Parameters** | | |
| Ambient Temperature | | 0℃~40℃ |
| Relative Humidity | | 10%~95% (non-condensing) |

## Power

SG-6000-A5800/A5600/A5555/A5255/A5155 use hot-swappable AC and DC power supply modules, which are connected to the corresponding external power supply via power cables and can be replaced at any time. Various power supply specifications are available, allowing you to choose DC/AC dual power products as needed.

Dual power supply (1+1 redundancy) : When two power supplies are connected at the same time, the two power supplies work simultaneously. If one power supply fails during operation, the other power supply takes over all the work to prevent losses caused by power failure. The two power supplies are mutually backup.

**Related Topics:**

- For instructions on how to install and remove power supply modules, refer to"Installing and Removing the Power Supply Module" on Page 325.
- For instructions on connecting the power supply module's power cable, refer to "Power Cable" on Page 211.

Table: Power Supplies of SG-6000-A5800/A5600/A5555/A5255/A5155

| Power Supply Specification | Power Supply Type | Input Voltage Range | Maximum Output Power of a Single Power Supply |
|---|---|---|---|
| Dual (1+1 redundancy) AC (default) Dual (1+1 redundancy) DC (optional) | Power Module | AC: 100~240V AC, 50/60Hz and HVDC: 180~300 HVDC DC: -36 ~ -72V DC | 550W |

## *Power Supply Module View*

SG-6000-A5800/A5600/A5555/A5255/A5155 device uses AC power module and DC power module as shown in the following figure.

AC Power Supply Module (C14 interface) View:

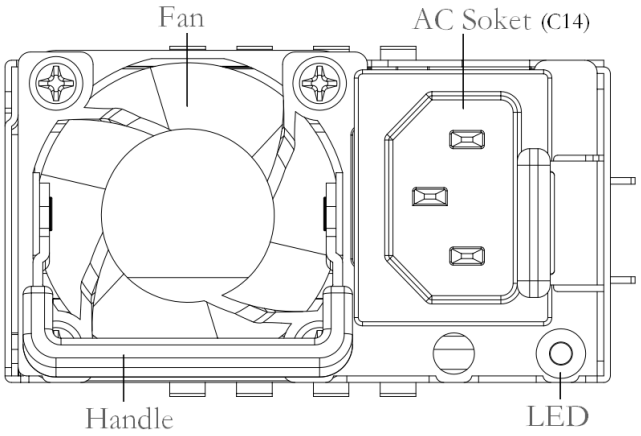


DC Power Supply Module View:

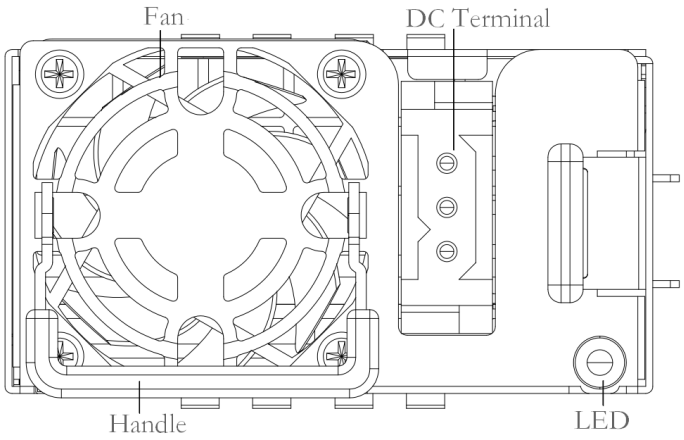


### *Power Supply Module LED Descriptions*

Table: Power Supply Module of SG-6000-A5800/A5600/A5555/A5255/A5155 LED Descriptions

| LED | Color/Status | Description |
|---|---|---|
| AC LED | Green/Always on | AC power module is functioning normally. |
| | Off | AC power module is powered off or has failed. |
| DC LED | Green/Always on | DC power module is functioning normally. |
| | Off | AC power module is powered off or has failed. |

## SSD

SSD on the device is mainly used for saving logs to the local for device monitoring, behavior auditing, etc.

SG-6000-A5800/A5600/A5555/A5255/A5155 does not come with a hard disk; you can purchase and install hard disks with different storage capacities as needed.

SSD View:

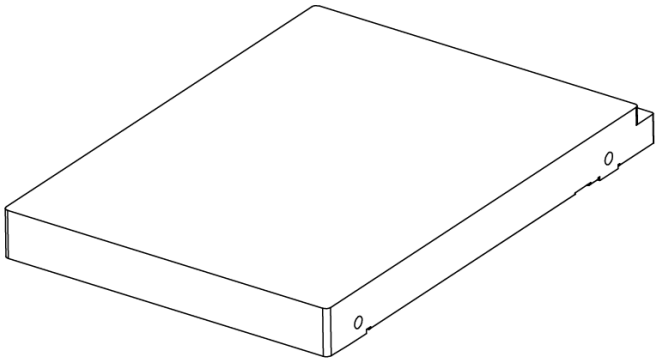

Table: SSD Types and Storage Capacity

| Type | Size | Storage Capacity |
|---|---|---|
| SSD | 2.5 inches | 3.84T/1.92T/960G/480G |

**Related Topics:**

- For instructions on installing the SSD, refer to Installing/Removing/Replacing the SSD .

**Note:**

- The device only supports the original Hillstone SSD. Installing a non-original SSD may cause abnormal running of the device. To purchase an original SSD, contact your sales representative.
- Due to differences in SSD capacity calculation methods, the operating system uses a binary algorithm, calculating 1MB as 1024KB, whereas the manufacturer’ s nominal capacity calculates 1MB as 1000KB and accounts for file system overhead. Therefore, there may be a discrepancy between the displayed and nominal capacities of the SSD. The capacity that is displayed prevails.

## Cooling System

SG-6000-A5800/A5600/A5555/A5255/A5155 device has 2 removable fan trays. The air inlet of the cooling system is located on the front panel. The air that passes through the device will be discharged from the air outlet on the back panel. To ensure the cooling system works normally, leave adequate space around the device.

Figure: Air Circulation

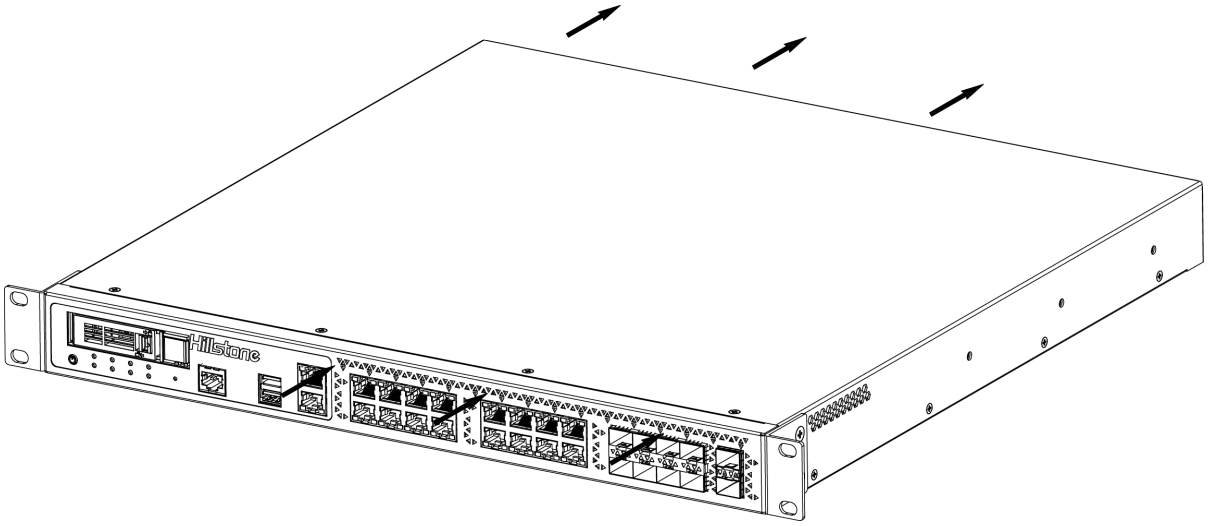

The ambient temperature should be kept between 0 and 40 degrees Celsius. If a fan works abnormally, the FAN LED will turn solid red, and then you should replace the fan/fan tray with a new one.

**Note:** The persistent abnormal fan will cause the system to be unable to dissipate heat in time. If the internal temperature is too high, the system will power off and the current configurations will not be saved.

## Available Expansion Module

The back panel of SG-6000-A5800/A5600/A5555/A5255/A5155 provides a expansion slot. The following table lists the supported expansion modules and the compatible transceiver modules. To use a supported expansion module, install the module into the device's expansion slot.

**Related Topics:**

- For a detailed introduction to the expansion module, refer to "Expansion Modules" on Page 224.
- For instructions on how to install and remove expansion modules, refer to"Installing and Removing the Expansion Module" on Page 326.

| Available Types of Expansion Modules | Expansion Module Models | Compatible Transceiver Modules |
|---|---|---|
| Interface module | IOC-A-2QSFP+(Without Bypass) | "40GE(QSFP+)Transceiver Module" on Page 263<br><br>**Note:** When the expansion module uses the TRAN-SR-QSFP+ transceiver module, you cannot use the **channel-speed 10000** command to split into four 10Gbps channels. |
| | IOC-A-4SFP+ (Without Bypass) | "10GE(SFP+) Transceiver Modules" on Page 254<br>Use the "1GE(SFP) Transceiver Module" on Page 243/"Copper SFP Module" on Page 252 after speed reduction.<br><br>**Note:** The transceiver modules TRAN- |

| Available Types of Expansion Modules | Expansion Module Models | Compatible Transceiver Modules |
| --- | --- | --- |
| | | SFP+-LX40 and TRAN-SFP+-LX80 are not supported. |
| Bypass module | IOC-A-2MM-BE<br>IOC-A-2SM-BE | - |

# SG-6000-A5500/A5200/A5100

SG-6000-A5500/A5200/A5100 device is designed to fit in standard 19-inch cabinets/racks. The mounting rail assemblies are included with the device, They can not only be installed in a standard 19-inch cabinet/rack with a tray or mounting rail assemblies, but also be placed on a workbench.


- Front Panel
- Back Panel
- Ports
- LED
- Buttons
- System Parameters
- Power
- SSD
- Cooling System
- Available Expansion Module


## Front Panel

The front panel of SG-6000-A5500/A5200/A5100 consists of 1 power button, 1 SSD expansion slot, 1 CLR button, 2 USB 3.0 ports, 1 Console port, 1 MGT port, two 10GE SFP+ HA port, ports 0-7 are GE RJ45 ports(ports 4/5, and ports 6/7 are bypassed to each other), ports 8-23 are GE SFP ports, ports 24-29 are 10GE SFP+ ports, several LED indicators (1 Power LED, 1 Status LED, 1 Alarm LED, 1 HA Status LED, 2 Power supply LED, 1 SSD LED, and 1 Fan LED), and several air inlets.

Figure: SG-6000-A5500/A5200/A5100 Front Panel

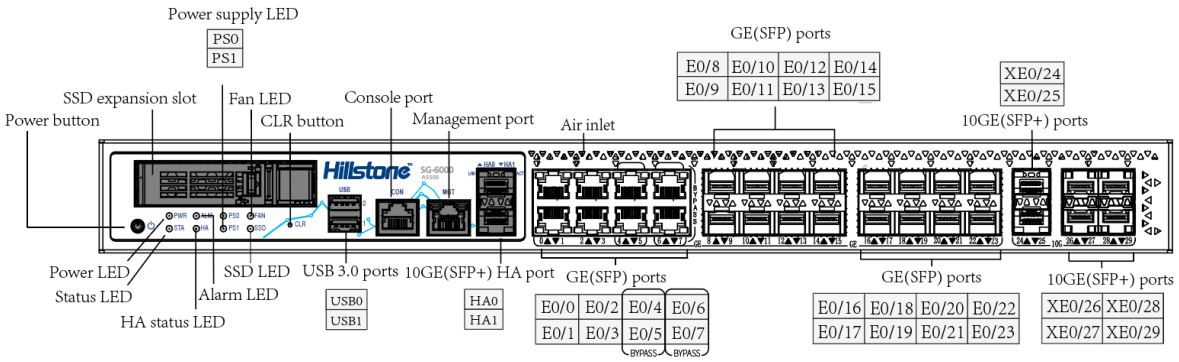


**Related Topics:**

- For instructions of ports, refer to Ports.
- For instructions of LED Indicators on the front panel, refer to LED.
- For information on how to use the power button and CLR button on the front panel, refer to Buttons.

## Back Panel

The back panel of SG-6000-A5500/A5200/A5100 consists of 2 power sockets (for removable power supply modules), 2 removable fan trays, 1 general expansion slot, and 1 grounding screw.

Figure: SG-6000-A5500/A5200/A5100 Back Panel

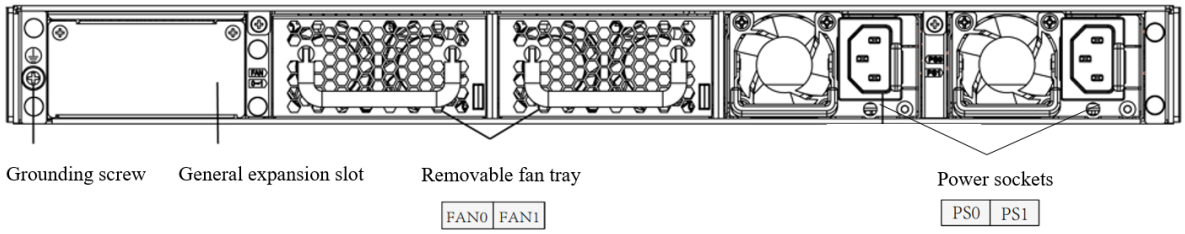


**Related Topics:**

- For information about the expansion modules available for general expansion slot, refer to Available Expansion Module.

## Ports

Note:

- The original Hillstone optical module should not be used together with optical modules from other manufacturers, otherwise some errors may occur.
- Before you use the transceiver module, we strongly recommend that you upgrade the device system to a specified version based on the SN format of the transceiver module. This way, you can prevent the transceiver module from being affected by version incompatibility. See Supported Versions for Transceiver Module.
- To avoid dust falling into the port socket, you should place a rubber dust cap (originally in the accessory box) over the port.

### *Fixed Ports*

Explanation of Corresponding Relationships for Fixed Ports of SG-6000-A5500/A5200/A5100

Table: Explanation of Corresponding Relationships for Fixed Ports of SG-6000-A5500/A5200/A5100

| Port Type/Number | Port Attributes | Compatible Transceiver Modules |
|---|---|---|
| eight GE(RJ45) ports (2 pairs of bypass) | Connector: RJ-45<br>Port Standard: Auto-MDI/MDIX (crossover cable and straight-through cable autosensing)<br>Frame Format: Ethernet_II/Ethernet_SNAP<br>Negotiation Mode: 10/100/1000Mbps autosensing, | - |

| Port Type/Number | Port Attributes | Compatible Transceiver Modules |
|---|---|---|
| | Full/half-duplex | |
| sixteen 10GE SFP+ports | Connector: SFP<br>Frame Format: Ethernet_II/Ethernet_SNAP<br>Negotiation Mode:<br>• SFP optical module: 1000Mbps<br>• SFP copper module: 1000Mbps, Full-duplex | "1GE(SFP) Transceiver Module" on Page 243/"Copper SFP Module" on Page 252 |
| six 10GE SFP+ports | Connector: SFP+<br>Frame Format: Ethernet_II/Ethernet_SNAP<br>Negotiation Mode:<br>• SFP+ optical module: 10Gbps<br>• SFP optical module: 1000Mbps<br>• SFP copper module: 1000Mbps, Full-duplex | "10GE(SFP+) Transceiver Modules" on Page 254<br>Use the "1GE(SFP) Transceiver Module" on Page 243/"Copper SFP Module" on Page 252at a reduced speed of 1Gbps. |

### *Management Ports*

The management port description of the SG-6000-A5500/A5200/A5100 device is shown in the table below.

Table: Explanation of Corresponding Relationships for Management Ports of SG-6000-A5500/A5200/A5100

| Port Type/Number | Port Attributes | Compatible Transceiver Modules |
|---|---|---|
| 1 MGT port | - | - |
| Two 10GE SFP+ HA port | Connector: SFP+<br>Frame Format: Ethernet_II/Ethernet_SNAP<br>Negotiation Mode:<br>• SFP+ optical module: 10Gbps<br>• SFP optical module: 1000Mbps<br>• SFP copper module: 1000Mbps, Full-duplex | "10GE(SFP+) Transceiver Modules" on Page 254<br>Use the "1GE(SFP) Transceiver Module" on Page 243/"Copper SFP Module" on Page 252at a reduced speed of 1Gbps. |
| 1 Console port | The device provides an RS-232C asynchronous serial console port for you to configure the device.<br>Connector: RJ-45<br>Port Standard: RS-232C<br>Baud Rate: 115200 bit/s<br>Services: Connect the CON port to the serial port of a PC and run a terminal emulation program on the PC to configure the device<br>Transmission Medium: Console | - |

| Port Type/Number | Port Attributes | Compatible Transceiver Modules |
|---|---|---|
| | cable | |
| 2 USB 3.0ports | Connector: USB Type-A interface<br>Port Standard: USB 3.0 host interface<br>Negotiation Mode:1.1/2.0/3.0 auto-sensing | - |

## LED

The following table describes the meanings of LED indicators on the front panels of SG-6000-A5500/A5200/A5100.

Note:

- The STA LED will remain OFF when there is a boot failure caused by OS software damage. Contact your sales representative if this occurs.
- For a port with a bandwidth of 10G/40G/100Gbps, a blinking or solid ACT LED indicates that the port is sending or receiving data.

Table: Front Panel LED Descriptions of SG-6000-A5500/A5200/A5100

| LED | LED Name | Color/Status | Description |
|---|---|---|---|
| PWR | Power LED | Green/Always on | The device power is running normally. |
| | | Orange/Red/Always on | The device power is running abnormally. |

| LED | LED Name | Color/Status | Description |
|---|---|---|---|
| | | Off | The device is powered off. |
| STA | Status LED | Green/Blinking | The system is running normally. |
| | | Off | The system has not been booted/is booting/has failed to boot. |
| ALM | Alarm LED | Red/Always on | The system is sending alarm(s). |
| | | Green/Blinking | The system is waiting. |
| | | Off | The system is running normally. |
| | | Orange/Blinking | The system is using a trial license. |
| | | Orange | The trial license has expired and there is no legitimate license installed in the system. |
| PS0, PS1 (Dual power supply) | Power LED | PS0: Green/Always on PS1: Green/Always on | Power Supply PS0 and PS1 are running normally. |
| | | PS0: Green/Always on, PS1: Red/Always on | Power Supply PS0 is running normally, Power Supply PS1 is powered off or has failed. |
| | | PS0: Red/Always on, PS1: Green/Always on | Power Supply PS0 is powered off or has failed, Power Supply PS1 is running normally. |
| | | PS0: Off, PS1: Off | Power Supply PS0 and PS1 are powered off or have failed. |
| HA | HA LED | Green/Always on | Not using HA. This device is the |

| LED | LED Name | Color/Status | Description |
|---|---|---|---|
| | | | master device. |
| | | Green/Blinking | Two devices are in an HA cluster. This device is working as the master. |
| | | Orange/Blinking | Two devices are in an HA cluster. This device is working as the slave. |
| | | Red/Blinking | HA function has failed. |
| FAN | FAN LED | Green/Always on | The cooling system is running normally. |
| | | Red/Always on | One of the fans has failed or one of the fan trays is not present. |
| SSD | SSD LED | Green/Blinking | SSD is transmitting data. |
| | | Off | SSD is not present or no data is transmitted. |
| LNK | LNK LED | Green/Always on | The link between this port and its peer device is in normal status. |
| | | Off | The link between this port and its peer device has failed or there is no connection. |
| ACT | ACT LED | Orange/Blinking | The port is sending or receiving data. |
| | | Off | No data is transmitted on this port. |

## Buttons

SG-6000-A5500/A5200/A5100 device includes two buttons, namely the power button and the CLR button.

### *Power Button*

The power button on the front panel of the SG-6000-A5500/A5200/A5100 is used for shutting down and restarting after shutting down.

- Shutdown: Long press the power button for about 5 seconds. When the PWR LED changes from blinking green to red or orange and the blue power button indicator is off, system is shut down and the power cord can be removed.
- Restart: After being connected to the power supply by the power cord for the first time, the device will automatically start up. If the device is shut down by pressing the power button or using the shutdown command, and the power cord has not been disconnected after shutdown, you can press the power button to power on the device.

### *CLR Button*

The CLR button on the front panel of SG-6000-A5500/A5200/A5100 is the pinhole of the front panel and is used to reset the device back to the factory default settings. You can restore access to the device with this button if the login password is lost.

**Note:** Use this button with caution. Resetting the device will clear all existing configurations.

To restore the factory default settings, take the following steps:

1. After powering on the device, when the system is in operation, use a pin to gently press the CLR button in the pinhole.
2. Wait for the CON port to print the message "Clear button is pressed, the machine will power down," and observe that the STA and ALM LEDs both turn to a solid red. Once the STA

and ALM LEDs go out, the device will restart, and during the startup process, the CON port will print the message "CLR button pressed."

3. Once the restart is completed, the factory settings will be restored.

## System Parameters

The following table lists the system parameters of SG-6000-A5500/A5200/A5100:

Table: System Parameters of SG-6000-A5500/A5200/A5100

| Item | Description |
|---|---|
| **System Parameters** | |
| Flash Memory | 64GB |
| **Dimensions and Weight** | |
| Height | 1U |
| Dimensions (W × D × H)<br>**Note:**In the data, the width of the device does not include that of rack-mounting ear; the depth of the device does not include that of front and back captive screw and washer; the height of the device does not include that of foot pad. | W436.0mm * D542.0mm * H44.0mm |
| Weight | Net weight: 10.2kg<br>Gross weight:14.8kg (accessories and packages included) |
| **Rated Power Consumption** | |
| Rated Power Consumption | 280W |

| Item | Description |
|---|---|
| **Environmental Parameters** | |
| Ambient Temperature | 0℃~40℃ |
| Relative Humidity | 10%~95% (non-condensing) |

## Power

SG-6000-A5500/A5200/A5100 use hot-swappable AC and DC power supply modules, which are connected to the corresponding external power supply via power cables and can be replaced at any time. Various power supply specifications are available, allowing you to choose DC/AC dual power products as needed.

Dual power supply (1+1 redundancy) : When two power supplies are connected at the same time, the two power supplies work simultaneously. If one power supply fails during operation, the other power supply takes over all the work to prevent losses caused by power failure. The two power supplies are mutually backup.

**Related Topics:**

- For instructions on how to install and remove power supply modules, refer to"Installing and Removing the Power Supply Module" on Page 325.
- For instructions on connecting the power supply module's power cable, refer to "Power Cable" on Page 211.

Table: Power Supplies of SG-6000-A5500/A5200/A5100

| Power Supply Specification | Power Supply Type | Input Voltage Range | Maximum Output Power of a Single Power Supply |
|---|---|---|---|
| Dual (1+1 redundancy) AC (default)<br>Dual (1+1 redundancy) | Power Module | AC: 100~240V AC, 50/60Hz and HVDC: 180~300 HVDC | 550W |

| Power Supply Specification | Power Supply Type | Input Voltage Range | Maximum Output Power of a Single Power Supply |
|---|---|---|---|
| DC (optional) | | DC: -36 ~ -72V DC | |

## *Power Supply Module View*

SG-6000-A5500/A5200/A5100 device uses AC power module and DC power module as shown in the following figure.

AC Power Supply Module (C14 interface) View:

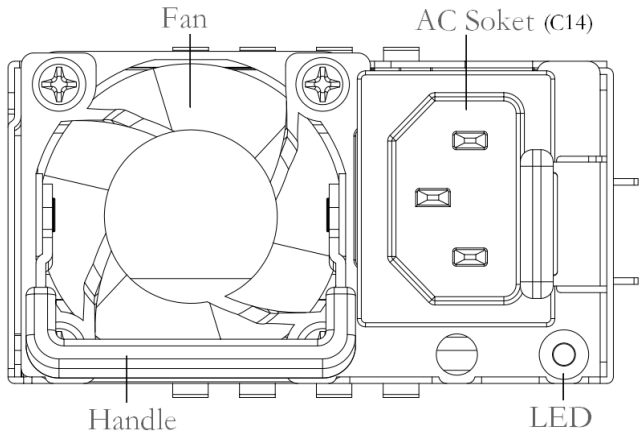


DC Power Supply Module View:

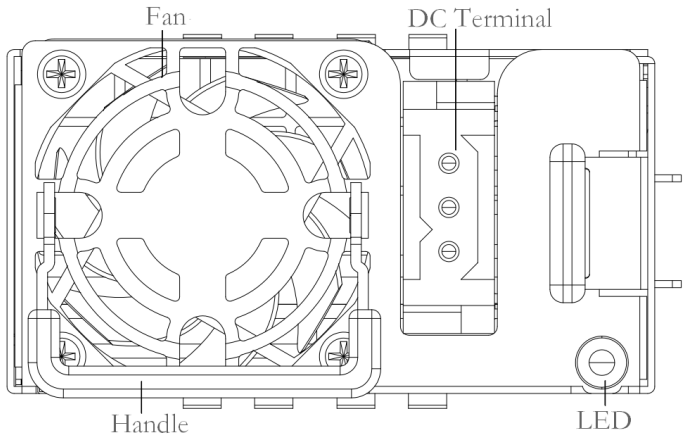

### *Power Supply Module LED Descriptions*

Table: Power Supply Module of SG-6000-A5500/A5200/A5100 LED descriptions

| LED | Color/Status | Description |
|---|---|---|
| AC LED | Green/Always on | AC power module is functioning normally. |
| | Off | AC power module is powered off or has failed. |
| DC LED | Green/Always on | DC power module is functioning normally. |
| | Off | AC power module is powered off or has failed. |

## SSD

SSD on the device is mainly used for saving logs to the local for device monitoring, behavior auditing, etc.

SG-6000-A5500/A5200/A5100 does not come with a hard disk; you can purchase and install hard disks with different storage capacities as needed.

SSD View:

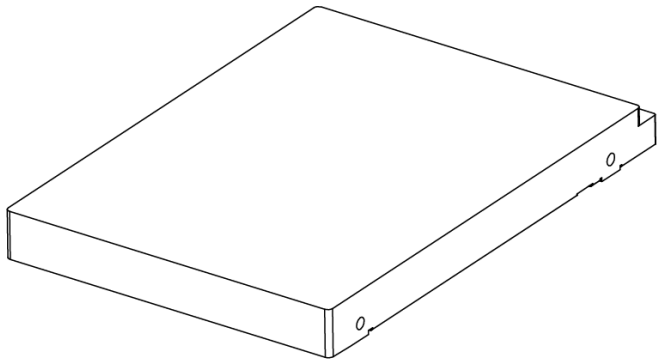

Table: SSD Types and Storage Capacity

| Type | Size | Storage Capacity |
|---|---|---|
| SSD | 2.5 inches | 3.84T/1.92T/960G/480G |

**Related Topics:**

- For instructions on installing the SSD, refer to Installing/Removing/Replacing the SSD.

**Note:**

- The device only supports the original Hillstone SSD. Installing a non-original SSD may cause abnormal running of the device. To purchase an original SSD, contact your sales representative.
- Due to differences in SSD capacity calculation methods, the operating system uses a binary algorithm, calculating 1MB as 1024KB, whereas the manufacturer's nominal capacity calculates 1MB as 1000KB and accounts for file system overhead. Therefore, there may be a discrepancy between the displayed and nominal capacities of the SSD. The capacity that is displayed prevails.

## Cooling System

SG-6000-A5500/A5200/A5100 device has 2 removable fan trays. The air inlet of the cooling system is located on the front panel. The air that passes through the device will be discharged from the air outlet on the back panel. To ensure the cooling system works normally, leave adequate space around the device.

Figure: Air Circulation

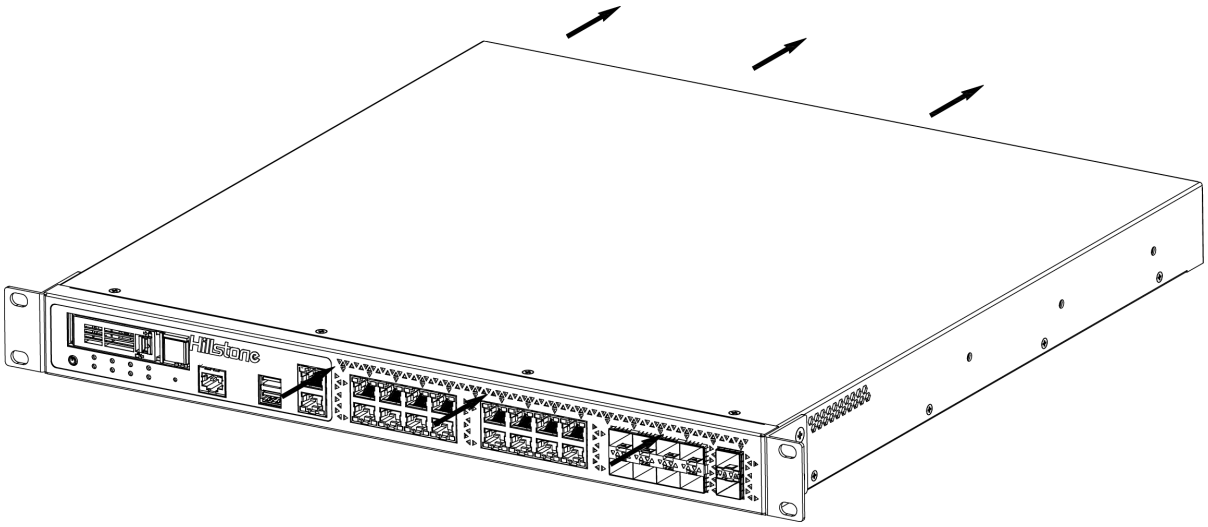

The ambient temperature should be kept between 0 and 40 degrees Celsius. If a fan works abnormally, the FAN LED will turn solid red, and then you should replace the fan/fan tray with a new one.

**Note:** The persistent abnormal fan will cause the system to be unable to dissipate heat in time. If the internal temperature is too high, the system will power off and the current configurations will not be saved.

## Available Expansion Module

The back panel of SG-6000-A5500/A5200/A5100 provides a expansion slot. The following table lists the supported expansion modules and the compatible transceiver modules. To use a supported expansion module, install the module into the device's expansion slot.

**Related Topics:**

- For a detailed introduction to the expansion module, refer to"Expansion Modules" on Page 224.
- For instructions on how to install and remove expansion modules, refer to"Installing and Removing the Expansion Module" on Page 326.

| Available Types of Expansion Modules | Expansion Module Models | Compatible Transceiver Modules |
| --- | --- | --- |
| Interface module | IOC-A-2QSFP+(Without Bypass) | "40GE(QSFP+)Transceiver Module" on Page 263<br><br>**Note:** When the expansion module uses the TRAN-SR-QSFP+ transceiver module, you cannot use the **channel-speed 10000** command to split into four 10Gbps channels. |
| | IOC-A-4SFP+(Without Bypass) | "10GE(SFP+) Transceiver Modules" on Page 254<br>Use the "1GE(SFP) Transceiver Module" on Page 243/"Copper SFP Module" on Page 252 after speed reduction.<br><br>**Note:** The transceiver modules TRAN-SFP+-LX40 and TRAN-SFP+-LX80 are not supported. |
| Bypass module | IOC-A-2MM-BE | |

| Available Types of Expansion Modules | Expansion Module Models | Compatible Transceiver Modules |
| --- | --- | --- |
| | IOC-A-2SM-BE | |

# SG-6000-A3815

SG-6000-A3815 device is designed to fit in standard 19-inch cabinets/racks. The mounting rail assemblies are included with the device, They can not only be installed in a standard 19-inch cabinet/rack with a tray or mounting rail assemblies, but also be placed on a workbench.

- Front Panel
- Back Panel
- Ports
- LED
- Buttons
- System Parameters
- Power
- SSD
- Cooling System
- Available Expansion Module

## Front Panel

The front panel of SG-6000-A3815 consists of 1 power button, 1 SSD expansion slot, 1 general expansion slot, 1 CLR button, 2 USB3.0 ports, 1 Console port, 1 MGT port, 1 HA port, ports 0-7 are GE RJ45 ports (ports 4/5, and ports 6/7 are bypassed to each other), ports 8-15 are GE(SFP) ports, several LED indicators (1 Power LED, 1 Status LED, 1 Alarm LED, 1 HA Status LED, 2 Power supply LED, 1 SSD LED, and 1 Fan LED), and several air inlets.

Figure: SG-6000-A3815 Front Panel

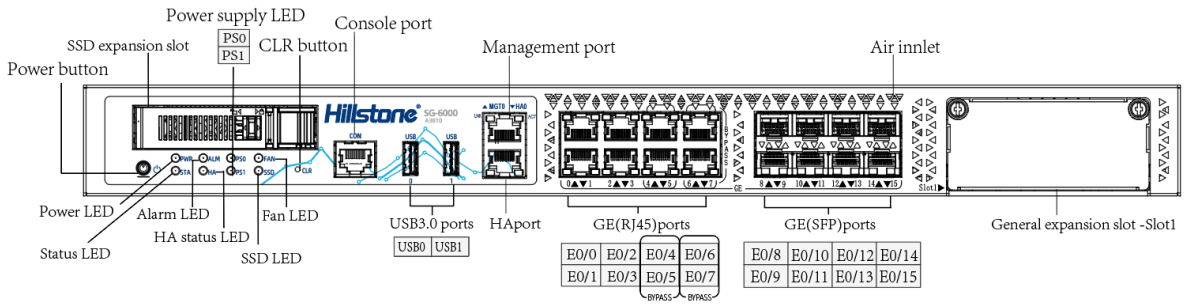


**Related Topics:**

- For instructions of ports, refer to Ports.
- For instructions of LED Indicators on the front panel, refer to LED.
- For information about the expansion modules available for general expansion slot, refer to Available Expansion Module.

## Back Panel

The back panel of SG-6000-A3815 consists of 2 power sockets (for removable power supply modules), 2 removable fan trays, 1 general expansion slot, 1 grounding screw.

Figure: SG-6000-A3815 Back Panel

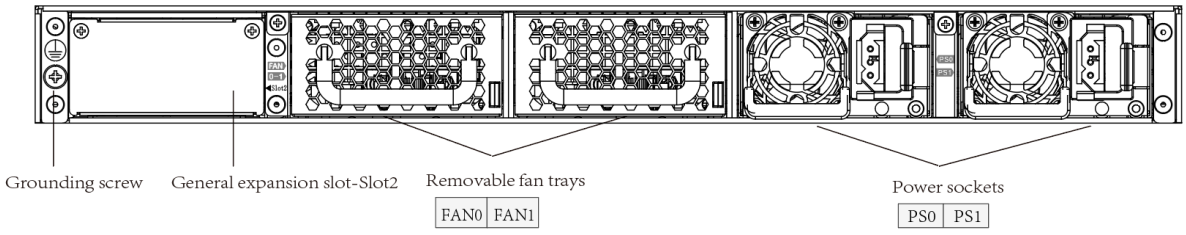


**Related Topics:**

- For information about the expansion modules available for general expansion slot, refer to Available Expansion Module.

## Ports

Note:

- The original Hillstone optical module should not be used together with optical modules from other manufacturers, otherwise some errors may occur.
- Before you use the transceiver module, we strongly recommend that you upgrade the device system to a specified version based on the SN format of the transceiver module. This way, you can prevent the transceiver module from being affected by version incompatibility. See Supported Versions for Transceiver Module.
- To avoid dust falling into the port socket, you should place a rubber dust cap (originally in the accessory box) over the port.

### *Fixed Ports*

Explanation of Corresponding Relationships for Fixed Ports of SG-6000-A3815

Table: Explanation of Corresponding Relationships for Fixed Ports of SG-6000-A3815

| Port Type/Number | Port Attributes | Compatible Transceiver Modules |
|---|---|---|
| eight GE(RJ45) ports (2 pairs of bypass) | Connector: RJ-45<br>Port Standard: Auto-MDI/MDIX (crossover cable and straight-through cable autosensing)<br>Frame Format: Ethernet_II/Ethernet_SNAP<br>Negotiation Mode: 10/100/1000Mbps autosensing, Full/half-duplex | - |

| Port Type/Number | Port Attributes | Compatible Transceiver Modules |
|---|---|---|
| 8 GE(SFP) ports | Connector: SFP<br>Frame Format: Ethernet_II/Ethernet_SNAP<br>Negotiation Mode:<br>• SFP optical module: 1000Mbps<br>• SFP copper module: 1000Mbps ,Full-duplex | "1GE(SFP) Transceiver Module" on Page 243/"Copper SFP Module" on Page 252 |

### *Management Ports*

The management port description of the SG-6000-A3815 device is shown in the table below.

Table: Explanation of Corresponding Relationships for Management Ports of SG-6000-A3815

| Port Type/Number | Port Attributes | Compatible Transceiver Modules |
|---|---|---|
| 1 MGT port | - | - |
| 1 HA port | Connector: RJ-45<br>Port Standard: Auto-MDI/MDIX (crossover cable and straight-through cable autosensing)<br>Frame Format: Ethernet_II/Ethernet_SNAP<br>Negotiation Mode: 10/100/1000Mbps autosensing, Full/half-duplex | - |

| Port Type/Number | Port Attributes | Compatible Transceiver Modules |
| --- | --- | --- |
| 1 Console port | The device provides an RS-232C asynchronous serial console port for you to configure the device.<br>Connector: RJ-45<br>Port Standard: RS-232C<br>Baud Rate: 115200 bit/s<br>Services: Connect the CON port to the serial port of a PC and run a terminal emulation program on the PC to configure the device<br>Transmission Medium: Console cable | - |
| 2 USB 3.0ports | Connector: USB Type-A interface<br>Port Standard: USB 3.0 host interface<br>Negotiation Mode:1.1/2.0/3.0 auto-sensing | - |

## LED

The following table describes the meanings of LED indicators on the front panels of SG-6000-A3815.

Note:

- The STA LED will remain OFF when there is a boot failure caused by OS software damage. Contact your sales representative if this occurs.

Table: Front Panel LED Descriptions

| LED | LED Name | Color/Status | Description |
|---|---|---|---|
| PWR | Power LED | Green/Always on | The device power is running normally. |
| | | Orange/Red/Always on | The device power is running abnormally. |
| | | Off | The device is powered off. |
| STA | Status LED | Green/Blinking | The system is running normally. |
| | | Off | The system has not been booted/is booting/has failed to boot. |
| ALM | Alarm LED | Red/Always on | The system is sending alarm(s). |
| | | Green/Blinking | The system is waiting. |
| | | Off | The system is running normally. |
| | | Orange/Blinking | The system is using a trial license. |
| | | Orange | The trial license has expired and there is no legitimate license installed in the system. |
| PS0, PS1 (Dual | Power LED | PS0: Green/Always on<br>PS1: Green/Always on | Power Supply PS0 and PS1 are running normally. |

| LED | LED Name | Color/Status | Description |
|---|---|---|---|
| power supply) | | | |
| | | PS0: Green/Always on, PS1: Red/Always on | Power Supply PS0 is running normally, Power Supply PS1 is powered off or has failed. |
| | | PS0: Red/Always on, PS1: Green/Always on | Power Supply PS0 is powered off or has failed, Power Supply PS1 is running normally. |
| | | PS0: Off, PS1: Off | Power Supply PS0 and PS1 are powered off or have failed. |
| HA | HA LED | Green/Always on | Not using HA. This device is the master device. |
| | | Green/Blinking | Two devices are in an HA cluster. This device is working as the master. |
| | | Orange/Blinking | Two devices are in an HA cluster. This device is working as the slave. |
| | | Red/Blinking | HA function has failed. |
| FAN | FAN LED | Green/Always on | The cooling system is running normally. |
| | | Red/Always on | One of the fans has failed or one of the fan trays is not present. |

| LED | LED Name | Color/Status | Description |
|---|---|---|---|
| SSD | SSD LED | Green/Blinking | SSD is transmitting data. |
| | | Off | SSD is not present or no data is transmitted. |
| LNK | LNK LED | Green/Always on | The link between this port and its peer device is in normal status. |
| | | Off | The link between this port and its peer device has failed or there is no connection. |
| ACT | ACT LED | Orange/Blinking | The port is sending or receiving data. |
| | | Off | No data is transmitted on this port. |

## Buttons

SG-6000-A3815device includes two buttons, namely the power button and the CLR button.

### *Power Button*

The power button on the front panel of the SG-6000-A3815 is used for shutting down and restarting after shutting down.

- Shutdown: Long press the power button for about 5 seconds. When the PWR LED changes from blinking green to red or orange and the blue power button indicator is off, system is shut down and the power cord can be removed.
- Restart: After being connected to the power supply by the power cord for the first time, the device will automatically start up. If the device is shut down by pressing the power button or

using the shutdown command, and the power cord has not been disconnected after shutdown, you can press the power button to power on the device.

### *CLR Button*

The CLR button on the front panel of SG-6000-A3815 is the pinhole of the front panel and is used to reset the device back to the factory default settings. You can restore access to the device with this button if the login password is lost.

**Note:** Use this button with caution. Resetting the device will clear all existing configurations.

To restore the factory default settings, take the following steps:

1. After powering on the device, when the system is in operation, use a pin to gently press the CLR button in the pinhole.
2. Wait for the CON port to print the message "Clear button is pressed, the machine will power down," and observe that the STA and ALM LEDs both turn to a solid red. Once the STA and ALM LEDs go out, the device will restart, and during the startup process, the CON port will print the message "CLR button pressed."
3. Once the restart is completed, the factory settings will be restored.

## System Parameters

The following table lists the system parameters of SG-6000-A3815:

Table: System Parameters of SG-6000-A3815

| Item | Description |
|---|---|
| **System Parameters** | |
| Flash Memory | 8GB |

| Item | Description |
| --- | --- |
| **Dimensions and Weight** | |
| Height | 1U |
| Dimensions (W×D×H)<br>**Note:**In the data, the width of the device does not include that of rack-mounting ear; the depth of the device does not include that of front and back captive screw and washer; the height of the device does not include that of foot pad. | W436.0mm * D459.5mm * H44.4mm |
| Weight | Net weight: 8.98kg<br>Gross weight:13.15kg (accessories and packages included) |
| **Rated Power Consumption** | |
| Rated Power Consumption | 90W |
| **Environmental Parameters** | |
| Ambient Temperature | 0℃~40℃ |
| Relative Humidity | 10%~95% (non-condensing) |

## Power

SG-6000-A3815 use hot-swappable AC and DC power supply modules, which are connected to the corresponding external power supply via power cables and can be replaced at any time.Various power supply specifications are available, allowing you to choose DC/AC dual power products as needed.

Dual power supply (1+1 redundancy) : When two power supplies are connected at the same time, the two power supplies work simultaneously. If one power supply fails during operation, the other power supply takes over all the work to prevent losses caused by power failure. The two power supplies are mutually backup.

**Related Topics:**

- For instructions on how to install and remove power supply modules, refer to "Installing and Removing the Power Supply Module" on Page 325.
- For instructions on connecting the power supply module's power cable, refer to "Power Cable" on Page 211.

Table: Power Supplies of SG-6000-A3815

| Power Supply Specification | Power Supply Type | Input Voltage Range | Maximum Output Power of a Single Power Supply |
|---|---|---|---|
| Dual (1+1 redundancy) AC (default)<br>Dual (1+1 redundancy) DC (optional) | Power Module | AC: 100~240V AC, 50/60Hz and HVDC: 180~300 HVDC<br>DC: -36 ~ -72V DC | 550W |

## *Power Supply Module View*

SG-6000-A3815 device uses AC power module and DC power module as shown in the following figure.

AC Power Supply Module (C14 interface) View:

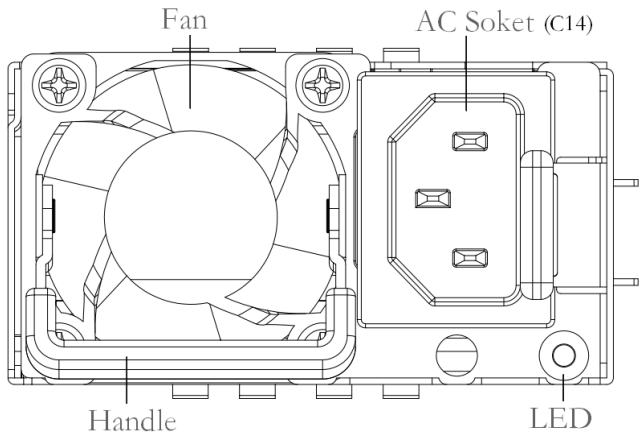


DC Power Supply Module View:

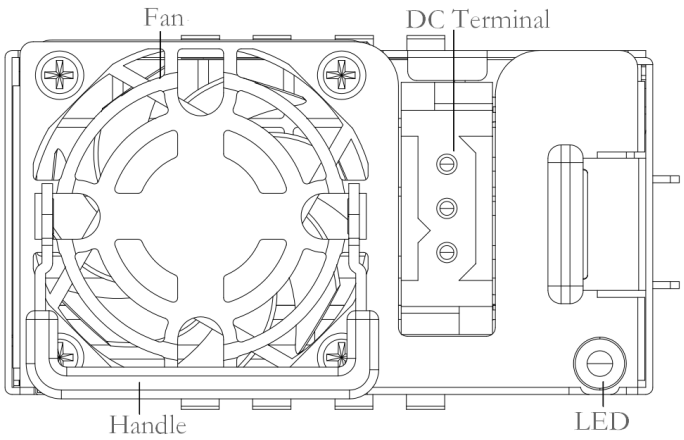


## *Power Supply Module LED Descriptions*

Table: Power Supply Module of SG-6000-A3815 LED descriptions

| LED | Color/Status | Description |
|---|---|---|
| AC LED | Green/Always on | AC power module is functioning normally. |
| | Off | AC power module is powered off or has failed. |

| LED | Color/Status | Description |
| --- | --- | --- |
| DC LED | Green/Always on | DC power module is functioning normally. |
| | Off | AC power module is powered off or has failed. |

## SSD

SSD on the device is mainly used for saving logs to the local for device monitoring, behavior auditing, etc.

SG-6000-A3815 does not come with a hard disk; you can purchase and install hard disks with different storage capacitiesas needed.

SSD View:

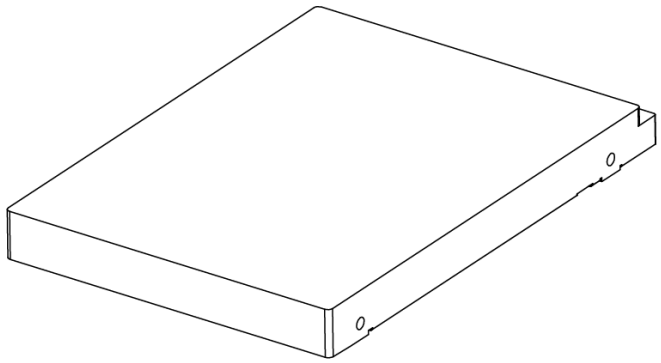

Table: SSD Types and Storage Capacity

| Type | Size | Storage Capacity |
| --- | --- | --- |
| SSD | 2.5 inches | 3.84T/1.92T/960G/480G |

**Related Topics:**

- For instructions on installing the SSD, refer to Installing/Removing/Replacing the SSD .

**Note:** The device only supports the original Hillstone SSD. Installing a non-original SSD may cause abnormal running of the device. Only certain models have an SSD installed in place in the factory. To purchase an original SSD, contact your sales representative.

## Cooling System

SG-6000-A3815 device has 2 removable fan trays. The air inlet of the cooling system is located on the front panel. The air that passes through the device will be discharged from the air outlet on the back panel. To ensure the cooling system works normally, leave adequate space around the device.

Figure: Air Circulation

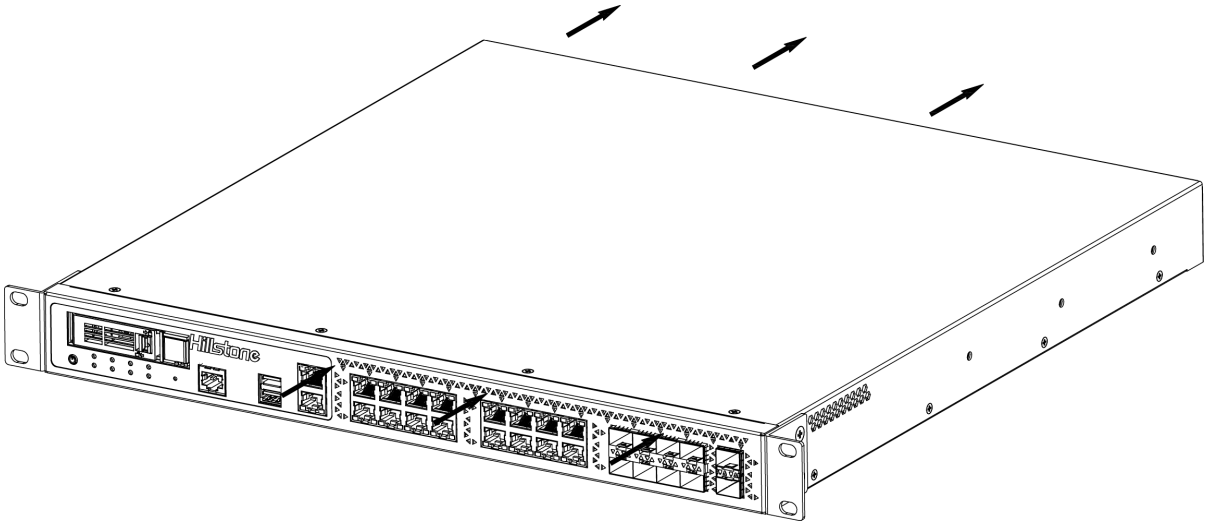

The ambient temperature should be kept between 0 and 40 degrees Celsius. If a fan works abnormally, the FAN LED will turn solid red, and then you should replace the fan/fan tray with a new one.

**Note:** The persistent abnormal fan will cause the system to be unable to dissipate heat in time. If the internal temperature is too high, the system will power off and the current configurations will not be saved.

## Available Expansion Module

The SG-6000-A3815 provides one expansion slot on both the front panel and the back panel. The following table lists the supported expansion modules and the compatible transceiver modules. To use a supported expansion module, install the module into the device's expansion slot.

**Related Topics:**

- For a detailed introduction to the expansion module, refer to"Expansion Modules" on Page 224.
- For instructions on how to install and remove expansion modules, refer to "Installing and Removing the Expansion Module" on Page 326.

| Available Types of Expansion Modules | Expansion Slot Location | Expansion Module Models | Compatible Transceiver Modules |
|---|---|---|---|
| Interface module | Expansion Slot of Front Panel | IOC-A-F-4SFP+ (Without Bypass)<br>IOC-A-F-8SFP+ (Without Bypass) | "10GE(SFP+) Transceiver Modules" on Page 254<br>Use the "1GE(SFP) Transceiver Module" on Page 243/"Copper SFP Module" on Page 252 after speed reduction. |
| | | IOC-A-F-8GE(4对Bypass) | - |
| | Expansion Slot of Back Panel | IOC-A-2QSFP+ (Without Bypass) | "40GE(QSFP+)Transceiver Module" on Page 263<br>**Note:** When the expansion module uses the TRAN-SR- |

| Available Types of Expansion Modules | Expansion Slot Location | Expansion Module Models | Compatible Transceiver Modules |
|---|---|---|---|
| | | | QSFP+ transceiver module, you cannot use the **channel-speed 10000** command to split into four 10Gbps channels. |
| | | IOC-A-4SFP+ (Without Bypass) | "10GE(SFP+) Transceiver Modules" on Page 254Use the "1GE(SFP) Transceiver Module" on Page 243/"Copper SFP Module" on Page 252 after speed reduction.<br>**Note:** The transceiver modules TRAN-SFP+-LX40 and TRAN-SFP+-LX80 are not supported. |
| Bypass module | Expansion Slot of Back Panel | IOC-A-2MM-BE<br>IOC-A-2SM-BE | - |

# SG-6000-A3800

SG-6000-A3800 device is designed to fit in standard 19-inch cabinets/racks. The mounting rail assemblies are included with the device, They can not only be installed in a standard 19-inch cabinet/rack with a tray or mounting rail assemblies, but also be placed on a workbench.


- Front Panel
- Back Panel
- Ports
- LED
- Buttons
- System Parameters
- Power
- SSD
- Cooling System
- Available Expansion Module


## Front Panel

The front panel of SG-6000-A3800 consists of 1 power button, 1 SSD expansion slot, 1 CLR button, 2 USB 3.0 ports, 1 Console port, 1 MGT port, 1 HA port, ports 0-15 are GE RJ45 ports (ports 12/13, and ports 14/15 are bypassed to each other), ports 16-23 are GE SFP ports, ports 24-25 are 10GE SFP+ ports, 1 Power LED, 1 Status LED, 1 Alarm LED, 1 HA LED, 2 Power supply LED (For A3700/A3600/A3000, devices with dual power supplies have 2 power supply LED PS0 and PS1, while devices with single power supply only have 1 power supply LED PS0), 1 SSD LED, and 1 Fan LED, and several air inlets.

Figure: SG-6000-A3800 Front Panel

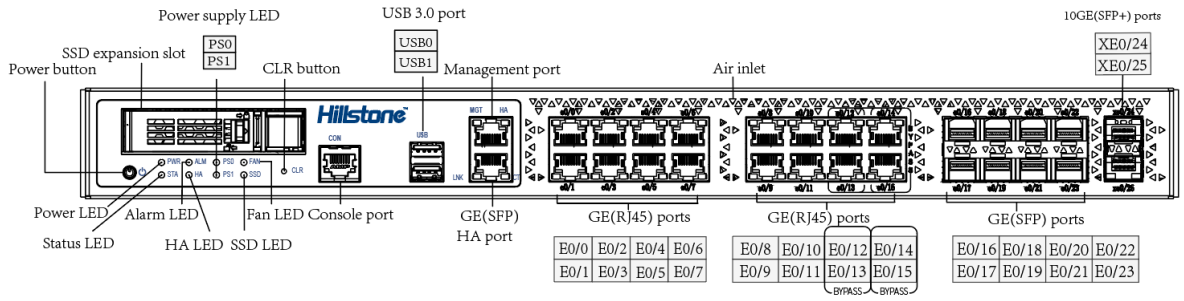


**Related Topics:**

- For instructions of ports, refer to Ports.
- For instructions of LED Indicators on the front panel, refer to LED.
- For information about the expansion modules available for general expansion slot, refer to Available Expansion Module.

## Back Panel

The back panel of SG-6000-A3800 consists of 2 power sockets (for removable power supply modules), 2 removable fan trays, 1 general expansion slot, and 1 grounding screw.

Figure: SG-6000-A3800 Back Panel

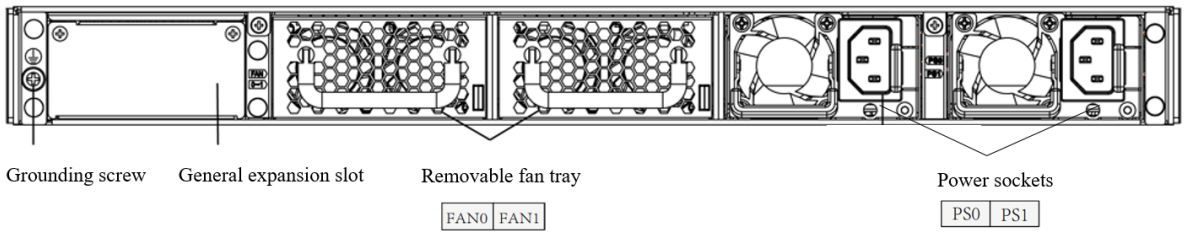


**Related Topics:**

- For information about the expansion modules available for general expansion slot, refer to Available Expansion Module.

## Ports

Note:

- The original Hillstone optical module should not be used together with optical modules from other manufacturers, otherwise some errors may occur.
- Before you use the transceiver module, we strongly recommend that you upgrade the device system to a specified version based on the SN format of the transceiver module. This way, you can prevent the transceiver module from being affected by version incompatibility. See Supported Versions for Transceiver Module.
- To avoid dust falling into the port socket, you should place a rubber dust cap (originally in the accessory box) over the port.

### *Fixed Ports*

Explanation of Corresponding Relationships for Fixed Ports of SG-6000-A3800.

Table: Explanation of Corresponding Relationships for Fixed Ports of SG-6000-A3800

| Port Type/Number | Port Attributes | Compatible Transceiver Modules |
|---|---|---|
| 16 Gigabyte Ethernet ports(2 pairs of bypass) | Connector: RJ-45<br>Port Standard: Auto-MDI/MDIX (crossover cable and straight-through cable autosensing)<br>Frame Format: Ethernet_II/Ethernet_SNAP<br>Negotiation Mode: 10/100/1000Mbps autosensing, Full/half-duplex | - |

| Port Type/Number | Port Attributes | Compatible Transceiver Modules |
|---|---|---|
| Eight 1GE SFP ports | Connector: SFP<br>Frame Format: Ethernet_II/Ethernet_SNAP<br>Negotiation Mode:<br>• SFP optical module: 1000Mbps<br>• SFP copper module: 1000Mbps ,Full-duplex | "1GE(SFP) Transceiver Module" on Page 243/"Copper SFP Module" on Page 252 |
| Two 10GE SFP+ ports | Connector: SFP+<br>Frame Format: Ethernet_II/Ethernet_SNAP<br>Negotiation Mode:<br>• SFP+ optical module: 10Gbps<br>• SFP optical module: 1000Mbps<br>• SFP copper module: 1000Mbps, Full-duplex | "10GE(SFP+) Transceiver Modules" on Page 254<br>Use the "1GE(SFP) Transceiver Module" on Page 243/"Copper SFP Module" on Page 252at a reduced speed of 1Gbps. |

### *Management Ports*

The management port description of the SG-6000-A3800 device is shown in the table below.

Table: Explanation of Corresponding Relationships for Management Ports of SG-6000-A3800

| Port Type/Number | Port Attributes | Compatible Transceiver Modules |
|---|---|---|
| 1 MGT port | - | - |
| 1 HA port | Connector: RJ-45<br>Port Standard: Auto-MDI/MDIX (crossover cable and straight-through cable autosensing)<br>Frame Format: Ethernet_II/Ethernet_SNAP<br>Negotiation Mode: 10/100/1000Mbps autosensing, Full/half-duplex | - |
| 1 Console port | The device provides an RS-232C asynchronous serial console port for you to configure the device.<br>Connector: RJ-45<br>Port Standard: RS-232C<br>Baud Rate: 115200 bit/s<br>Services: Connect the CON port to the serial port of a PC and run a terminal emulation program on the PC to configure the device<br>Transmission Medium: Console cable | - |
| 2 USB 3.0ports | Connector: USB Type-A interface<br>Port Standard: USB 3.0 host inter- | - |

| Port Type/Number | Port Attributes | Compatible Transceiver Modules |
|---|---|---|
| | face<br>Negotiation Mode:1.1/2.0/3.0 auto-sensing | |

## LED

The following table describes the meanings of LED indicators on the front panels of SG-6000-A3800.

Note:

- The STA LED will remain OFF when there is a boot failure caused by OS software damage. Contact your sales representative if this occurs.
- For a port with a bandwidth of 10G, a blinking or solid ACT LED indicates that the port is sending or receiving data.

Table: Front Panel LED Descriptions of SG-6000-A3800

| LED | LED Name | Color/Status | Description |
|---|---|---|---|
| PWR | Power LED | Green/Always on | The device power is running normally. |
| | | Orange/Red/Always on | The device power is running abnormally. |
| | | Off | The device is powered off. |

| LED | LED Name | Color/Status | Description |
|---|---|---|---|
| STA | Status LED | Green/Blinking | The system is running normally. |
| | | Off | The system has not been booted/is booting/has failed to boot. |
| ALM | Alarm LED | Red/Always on | The system is sending alarm(s). |
| | | Green/Blinking | The system is waiting. |
| | | Off | The system is running normally. |
| | | Orange/Blinking | The system is using a trial license. |
| | | Orange | The trial license has expired and there is no legitimate license installed in the system. |
| PS0、PS1 | Power supply LED | PS0: Green/Always on<br>PS1: Green/Always on | Power Supply PS0 and PS1 are running normally. |
| | | PS0: Green/Always on,<br>PS1: Red/Always on | Power Supply PS0 is running normally, Power Supply PS1 is powered off or has failed. |
| | | PS0: Red/Always on, PS1: Green/Always on | Power Supply PS0 is powered off or has failed, Power Supply PS1 is running normally. |
| | | PS0: Off, PS1: Off | Power Supply PS0 and PS1 are powered off or have failed. |
| HA | HA LED | Green/Always on | Not using HA. This device is the master device. |

| LED | LED Name | Color/Status | Description |
|---|---|---|---|
| | | Green/Blinking | Two devices are in an HA cluster. This device is working as the master. |
| | | Orange/Blinking | Two devices are in an HA cluster. This device is working as the slave. |
| | | Red/Blinking | HA function has failed. |
| FAN | FAN LED | Green/Always on | The cooling system is running normally. |
| | | Red/Always on | One of the fans has failed or one of the fan trays is not present. |
| SSD | SSD LED | Green/Blinking | SSD is transmitting data. |
| | | Off | SSD is not present or no data is transmitted. |
| LNK | LNK LED | Green/Always on | The link between this port and its peer device is in normal status. |
| | | Off | The link between this port and its peer device has failed or there is no connection. |
| ACT | ACT LED | Orange/Blinking | The port is sending or receiving data. |
| | | Off | No data is transmitted on this port. |

## Buttons

SG-6000-A3800 device includes two buttons, namely the power button and the CLR button.

### *Power Button*

The power button on the front panel of the SG-6000-A3800 is used for shutting down and restarting after shutting down.

- Shutdown: Long press the power button for about 5 seconds. When the PWR LED changes from blinking green to red or orange and the blue power button indicator is off, system is shut down and the power cord can be removed.
- Restart: After being connected to the power supply by the power cord for the first time, the device will automatically start up. If the device is shut down by pressing the power button or using the shutdown command, and the power cord has not been disconnected after shutdown, you can press the power button to power on the device.

### *CLR Button*

The CLR button on the front panel of SG-6000-A3800 is the pinhole of the front panel and is used to reset the device back to the factory default settings. You can restore access to the device with this button if the login password is lost.

> **Note:** Use this button with caution. Resetting the device will clear all existing configurations.

To restore the factory default settings, take the following steps:

1. After powering on the device, when the system is in operation, use a pin to gently press the CLR button in the pinhole.
2. Wait for the CON port to print the message "Clear button is pressed, the machine will power down," and observe that the STA and ALM LEDs both turn to a solid red. Once the STA

and ALM LEDs go out, the device will restart, and during the startup process, the CON port will print the message "CLR button pressed."

3. Once the restart is completed, the factory settings will be restored.

## System Parameters

The following table lists the system parameters of SG-6000-A3800:

Table: System Parameters of SG-6000-A3800

| Item | Description |
|---|---|
| **System Parameters** | |
| Flash Memory | 8GB |
| **Dimensions and Weight** | |
| Height | 1U |
| Dimensions (W × D × H)<br>**Note:**In the data, the width of the device does not include that of rack-mounting ear; the depth of the device does not include that of front and back captive screw and washer; the height of the device does not include that of foot pad. | W436.0mm * D437.0mm * H44.0mm |
| Weight | Net weight: 6.8kg<br>Gross weight:11.8kg (accessories and packages included) |

| Item | Description |
| --- | --- |
| **Rated Power Consumption** | |
| Rated Power Consumption | 100W |
| **Environmental Parameters** | |
| Ambient Temperature | 0℃~40℃ |
| Relative Humidity | 10%~95% (non-condensing) |

## Power

SG-6000-A3800 use pluggable AC and DC power supply modules, which are connected to the corresponding external power supply via power cables. Various power supply specifications are available, allowing you to choose DC/AC dual power products as needed.

Dual power supply (1+1 redundancy) : When two power supplies are connected at the same time, the two power supplies work simultaneously. If one power supply fails during operation, the other power supply takes over all the work to prevent losses caused by power failure. The two power supplies are mutually backup.

**Related Topics:**

- For instructions on how to install and remove power supply modules, refer to "Installing and Removing the Power Supply Module" on Page 325.
- For instructions on connecting the power supply module's power cable, refer to "Power Cable" on Page 211.

Table: Power Supplies of SG-6000-A3800

| Power Supply Specification | Power Supply Type | Input Voltage Range | Maximum Output Power of a Single Power Supply |
|---|---|---|---|
| Dual (1+1 redundancy) AC (default) Dual (1+1 redundancy) DC (optional) | Power Module | AC: 100~240V AC, 50/60Hz and HVDC: 180~300 HVDC DC: -36 ~ -72V DC | 550W |

## *Power Supply Module View*

SG-6000-A3800 device uses AC power module and DC power module as shown in the following figure.

AC Power Supply Module (C14 interface) View:

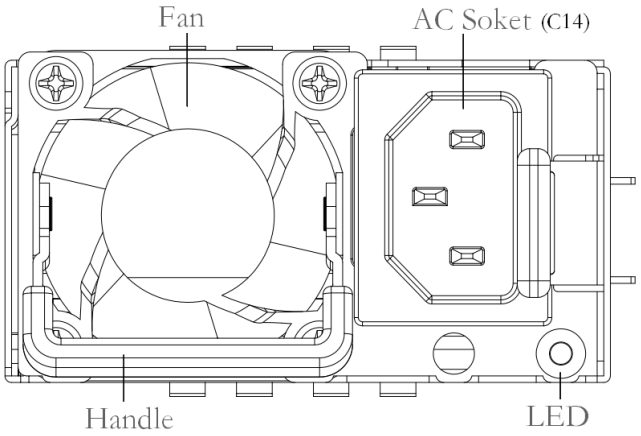


DC Power Supply Module View:

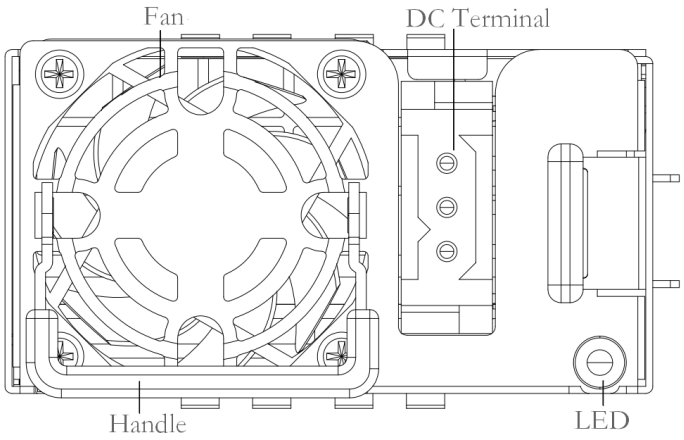


### *Power Supply Module LED Descriptions*

Table: Power Supply Module of SG-6000-A3800 LED descriptions

| LED | Color/Status | Description |
|---|---|---|
| AC LED | Green/Always on | AC power module is functioning normally. |
| | Off | AC power module is powered off or has failed. |
| DC LED | Green/Always on | DC power module is functioning normally. |
| | Off | AC power module is powered off or has failed. |

## SSD

SSD on the device is mainly used for saving logs to the local for device monitoring, behavior auditing, etc.

SG-6000-A3800does not come with a hard disk; you can purchase and install hard disks with different storage capacities as needed.

SSD View:

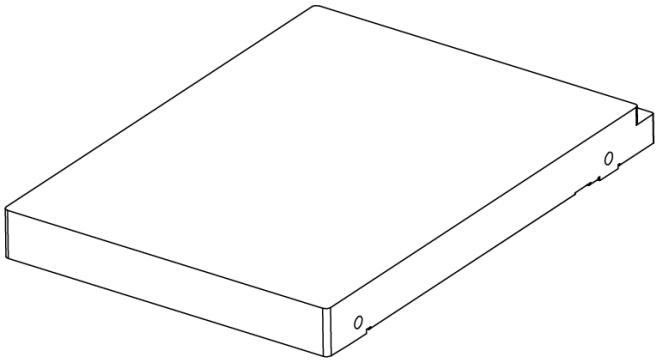

Table: SSD Types and Storage Capacity

| Type | Size | Storage Capacity |
|---|---|---|
| SSD | 2.5 inches | 3.84T/1.92T/960G/480G |

**Related Topics:**

- For instructions on installing the SSD, refer to Installing/Removing/Replacing the SSD .

**Note:**

- The device only supports the original Hillstone SSD. Installing a non-original SSD may cause abnormal running of the device. To purchase an original SSD, contact your sales representative.
- Due to differences in SSD capacity calculation methods, the operating system uses a binary algorithm, calculating 1MB as 1024KB, whereas the manufacturer’ s nominal capacity calculates 1MB as 1000KB and accounts for file system overhead. Therefore, there may be a discrepancy between the displayed and nominal capacities of the SSD. The capacity that is displayed prevails.

## Cooling System

SG-6000-A3800 device has 2 removable fan trays. The air inlet of the cooling system is located on the front panel. The air that passes through the device will be discharged from the air outlet on the back panel. To ensure the cooling system works normally, leave adequate space around the device.

Figure: Air Circulation

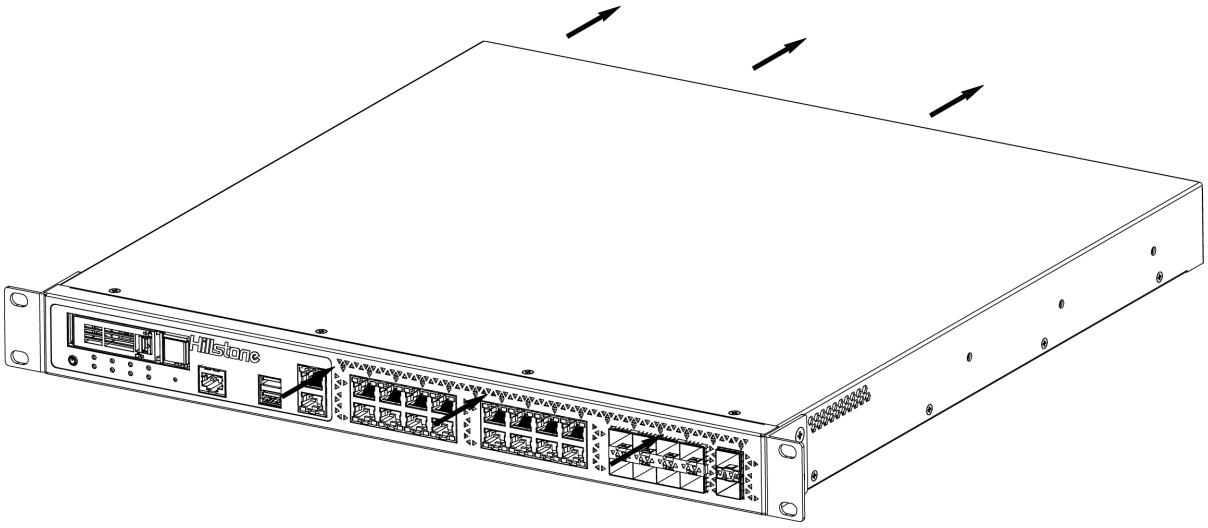

The ambient temperature should be kept between 0 and 40 degrees Celsius. If a fan works abnormally, the FAN LED will turn solid red, and then you should replace the fan/fan tray with a new one.

**Note:** The persistent abnormal fan will cause the system to be unable to dissipate heat in time. If the internal temperature is too high, the system will power off and the current configurations will not be saved.

## Available Expansion Module

The back panel of SG-6000-A3800 provides a expansion slot. The following table lists the supported expansion modules and the compatible transceiver modules. To use a supported expansion module, install the module into the device's expansion slot.

**Related Topics:**

- For a detailed introduction to the expansion module, refer to "Expansion Modules" on Page 224.
- For instructions on how to install and remove expansion modules, refer to "Installing and Removing the Expansion Module" on Page 326.

| Available Types of Expansion Modules | Expansion Module Models | Compatible Transceiver Modules |
|---|---|---|
| Interface module | IOC-A-2QSFP+(Without Bypass) | "40GE(QSFP+)Transceiver Module" on Page 263<br><br>**Note:** When the expansion module uses the TRAN-SR-QSFP+ transceiver module, you cannot use the **channel-speed 10000** command to split into four 10Gbps channels. |
| | IOC-A-4SFP+(Without Bypass) | "10GE(SFP+) Transceiver Modules" on Page 254<br>Use the "1GE(SFP) Transceiver Module" on Page 243/"Copper SFP Module" on Page 252 after speed reduction.<br><br>**Note:** The transceiver modules TRAN- |

| Available Types of Expansion Modules | Expansion Module Models | Compatible Transceiver Modules |
| --- | --- | --- |
| | | SFP+-LX40 and TRAN-SFP+-LX80 are not supported. |
| Bypass module | IOC-A-2MM-BE<br>IOC-A-2SM-BE | |

# SG-6000-A3700

SG-6000-A3700 device is designed to fit in standard 19-inch cabinets/racks. The mounting rail assemblies are included with the device, They can not only be installed in a standard 19-inch cabinet/rack with a tray or mounting rail assemblies, but also be placed on a workbench.

- Front Panel
- Back Panel
- Ports
- LED
- Buttons
- System Parameters
- Power
- SSD
- Cooling System
- Available Expansion Module

## Front Panel

The front panel of SG-6000-A3700 consists of 1 power button, 1 SSD expansion slot, 1 CLR button, 2 USB 3.0 ports, 1 Console port, 1 MGT port, 1 HA port, ports 0-15 are GE RJ45 ports (ports 12/13, and ports 14/15 are bypassed to each other), ports 16-23 are GE SFP ports, ports 24-25 are 10GE SFP+ ports, 1 Power LED, 1 Status LED, 1 Alarm LED, 1 HA LED, 2 Power supply LED (device with dual power supplies have 2 power supply LED PS0 and PS1, while devices with single power supply only have 1 power supply LED PS0), 1 SSD LED, and 1 Fan LED, and several air inlets.

Figure: SG-6000-A3700 Front Panel

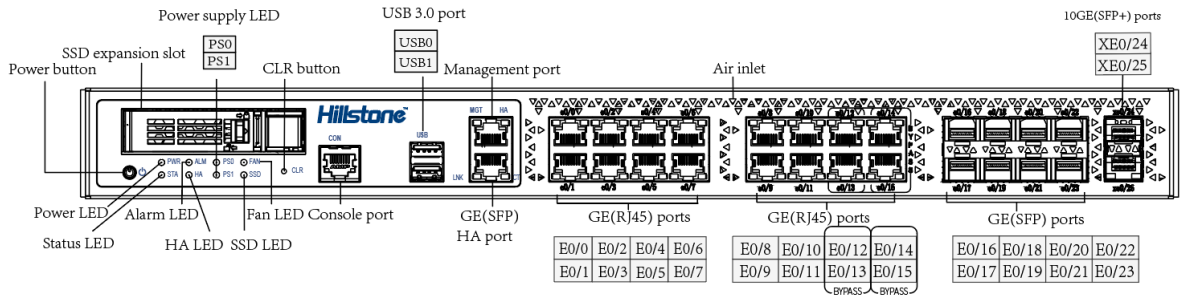


**Related Topics:**

- For instructions of ports, refer to Ports.
- For instructions of LED Indicators on the front panel, refer to LED.
- For information on how to use the power button and CLR button on the front panel, refer to Buttons.

## Back Panel

The back panel of SG-6000-A3700 consists of 2 power sockets (devices with dual power supplies have 2 power sockets, while devices with single power supply only have 1 power socket), 4 built-in fans, 1 general expansion slot, and 1 grounding screw.

Figure: SG-6000-A3700 (dual power supplies) Back Panel

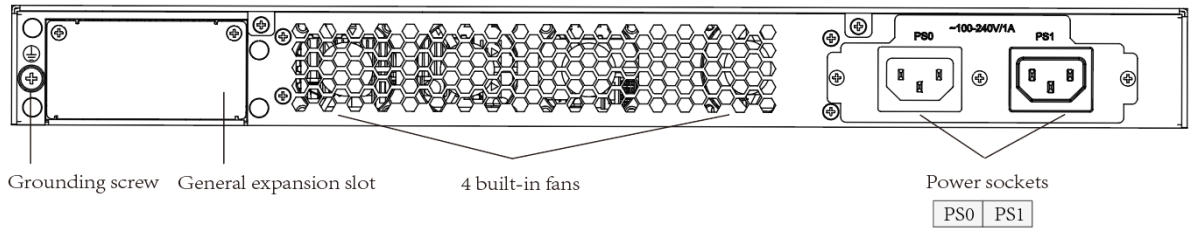


**Related Topics:**

- For information about the expansion modules available for general expansion slot, refer to Available Expansion Module.

## Ports

Note:

- The original Hillstone optical module should not be used together with optical modules from other manufacturers, otherwise some errors may occur.
- Before you use the transceiver module, we strongly recommend that you upgrade the device system to a specified version based on the SN format of the transceiver module. This way, you can prevent the transceiver module from being affected by version incompatibility. See Supported Versions for Transceiver Module.
- To avoid dust falling into the port socket, you should place a rubber dust cap (originally in the accessory box) over the port.

### *Fixed Ports*

Explanation of Corresponding Relationships for Fixed Ports of SG-6000-A3700.

Table: Explanation of Corresponding Relationships for Fixed Ports of SG-6000-A3700

| Port Type/Number | Port Attributes | Compatible Transceiver Modules |
|---|---|---|
| 16 Gigabyte Ethernet ports(2 pairs of bypass) | Connector: RJ-45<br>Port Standard: Auto-MDI/MDIX (crossover cable and straight-through cable autosensing)<br>Frame Format: Ethernet_II/Ethernet_SNAP<br>Negotiation Mode: 10/100/1000Mbps autosensing, Full/half-duplex | - |

| Port Type/Number | Port Attributes | Compatible Transceiver Modules |
| --- | --- | --- |
| 8 GE(SFP) ports | Connector: SFP<br>Frame Format: Ethernet_II/Ethernet_SNAP<br>Negotiation Mode:<br>• SFP optical module: 1000Mbps<br>• SFP copper module: 1000Mbps ,Full-duplex | "1GE(SFP) Transceiver Module" on Page 243/"Copper SFP Module" on Page 252 |
| 2个10GE SFP+ports | Connector: SFP+<br>Frame Format: Ethernet_II/Ethernet_SNAP<br>Negotiation Mode:<br>• SFP+ optical module: 10Gbps<br>• SFP optical module: 1000Mbps<br>• SFP copper module: 1000Mbps, Full-duplex | "10GE(SFP+) Transceiver Modules" on Page 254<br>Use the "1GE(SFP) Transceiver Module" on Page 243/"Copper SFP Module" on Page 252at a reduced speed of 1Gbps. |

### *Management Ports*

The management port description of the SG-6000-A3700 device is shown in the table below.

Table: Explanation of Corresponding Relationships for Management Ports of SG-6000-A3700

| Port Type/Number | Port Attributes | Compatible Transceiver Modules |
| --- | --- | --- |
| 1 MGT port | - | - |
| 1 HA port | Connector: RJ-45<br>Port Standard: Auto-MDI/MDIX (crossover cable and straight-through cable autosensing)<br>Frame Format: Ethernet_II/Ethernet_SNAP<br>Negotiation Mode: 10/100/1000Mbps autosensing, Full/half-duplex | - |
| 1 Console port | The device provides an RS-232C asynchronous serial console port for you to configure the device.<br>Connector: RJ-45<br>Port Standard: RS-232C<br>Baud Rate: 115200 bit/s<br>Services: Connect the CON port to the serial port of a PC and run a terminal emulation program on the PC to configure the device<br>Transmission Medium: Console cable | - |
| 2 USB 3.0ports | Connector: USB Type-A interface<br>Port Standard: USB 3.0 host inter- | - |

| Port Type/Number | Port Attributes | Compatible Transceiver Modules |
|---|---|---|
| | face<br>Negotiation Mode:1.1/2.0/3.0 auto-sensing | |

## LED

The following table describes the meanings of LED indicators on the front panels of SG-6000-A3700.

Note:

- The STA LED will remain OFF when there is a boot failure caused by OS software damage. Contact your sales representative if this occurs.
- For a port with a bandwidth of 10G, a blinking or solid ACT LED indicates that the port is sending or receiving data.

Table: Front Panel LED Descriptions of SG-6000-A3700

| LED | LED Name | Color/Status | Description |
|---|---|---|---|
| PWR | Power LED | Green/Always on | The device power is running normally. |
| | | Orange/Red/Always on | The device power is running abnormally. |
| | | Off | The device is powered off. |

| LED | LED Name | Color/Status | Description |
|---|---|---|---|
| STA | Status LED | Green/Blinking | The system is running normally. |
| | | Off | The system has not been booted/is booting/has failed to boot. |
| ALM | Alarm LED | Red/Always on | The system is sending alarm(s). |
| | | Green/Blinking | The system is waiting. |
| | | Off | The system is running normally. |
| | | Orange/Blinking | The system is using a trial license. |
| | | Orange | The trial license has expired and there is no legitimate license installed in the system. |
| PS0 (Single power supply) | Green/Always on | Green/Always on | Power Supply PS0 is running normally. |
| | | Off | Power Supply PS0 is powered off or has failed. |
| PS0, PS1 (Dual power supply) | Power supply LED | PS0: Green/Always on<br>PS1: Green/Always on | Power Supply PS0 and PS1 are running normally. |
| | | PS0: Green/Always on,<br>PS1: Red/Always on | Power Supply PS0 is running normally, Power Supply PS1 is powered off or has failed. |
| | | PS0: Red/Always on,<br>PS1: Green/Always on | Power Supply PS0 is powered off or has failed, Power Supply PS1 is |

| LED | LED Name | Color/Status | Description |
|---|---|---|---|
| | | | running normally. |
| | | PS0: Off, PS1: Off | Power Supply PS0 and PS1 are powered off or have failed. |
| HA | HA LED | Green/Always on | Not using HA. This device is the master device. |
| | | Green/Blinking | Two devices are in an HA cluster. This device is working as the master. |
| | | Orange/Blinking | Two devices are in an HA cluster. This device is working as the slave. |
| | | Red/Blinking | HA function has failed. |
| FAN | FAN LED | Green/Always on | The cooling system is running normally. |
| | | Red/Always on | One of the fans has failed or one of the fan trays is not present. |
| SSD | SSD LED | Green/Blinking | SSD is transmitting data. |
| | | Off | SSD is not present or no data is transmitted. |
| LNK | LNK LED | Green/Always on | The link between this port and its peer device is in normal status. |
| | | Off | The link between this port and its |

| LED | LED Name | Color/Status | Description |
|---|---|---|---|
| | | | peer device has failed or there is no connection. |
| ACT | ACT LED | Orange/Blinking | The port is sending or receiving data. |
| | | Off | No data is transmitted on this port. |

## Buttons

SG-6000-A3700 device includes two buttons, namely the power button and the CLR button.

### *Power Button*

The power button on the front panel of the SG-6000-A3700 is used for shutting down and restarting after shutting down.

- Shutdown: Long press the power button for about 5 seconds. When the PWR LED changes from blinking green to red or orange and the blue power button indicator is off, system is shut down and the power cord can be removed.
- Restart: After being connected to the power supply by the power cord for the first time, the device will automatically start up. If the device is shut down by pressing the power button or using the shutdown command, and the power cord has not been disconnected after shutdown, you can press the power button to power on the device.

### *CLR Button*

The CLR button on the front panel of SG-6000-A3700 is the pinhole of the front panel and is used to reset the device back to the factory default settings. You can restore access to the device with this button if the login password is lost.

**Note:** Use this button with caution. Resetting the device will clear all existing configurations.

To restore the factory default settings, take the following steps:

1. After powering on the device, when the system is in operation, use a pin to gently press the CLR button in the pinhole.
2. Wait for the CON port to print the message "Clear button is pressed, the machine will power down," and observe that the STA and ALM LEDs both turn to a solid red. Once the STA and ALM LEDs go out, the device will restart, and during the startup process, the CON port will print the message "CLR button pressed."
3. Once the restart is completed, the factory settings will be restored.

## System Parameters

The following table lists the system parameters of SG-6000-A3700:

Table: System Parameters of SG-6000-A3700

| Item | Description |
|---|---|
| **System Parameters** | |
| Flash Memory | 8GB |
| **Dimensions and Weight** | |
| Height | 1U |
| Dimensions (W × D × H)<br>**Note:**In the data, the width of the device does not include that of rack-mounting ear; the depth of the device does not include that of front | W436.0mm * D437.0mm * H44.0mm |

| Item | Description |
| --- | --- |
| and back captive screw and washer; the height of the device does not include that of foot pad. | |
| Weight | Net weight: 6.1kg<br>Gross weight:9.5kg (accessories and packages included) |
| **Rated Power Consumption** | |
| Rated Power Consumption | 100W |
| **Environmental Parameters** | |
| Ambient Temperature | 0℃~40℃ |
| Relative Humidity | 10%~95% (non-condensing) |

## Power

SG-6000-A3700 uses a fixed power supply that is connected to the external power supply via power cables. The fixed power supply cannot be replaced. Various power supply specifications are available, allowing you to choose between DC/AC single power or AC dual power with 1+1 redundancy as needed.

Dual power supply (1+1 redundancy) : When two power supplies are connected at the same time, the two power supplies work simultaneously. If one power supply fails during operation, the other power supply takes over all the work to prevent losses caused by power failure. The two power supplies are mutually backup.

**Related Topics:**

- For instructions on connecting the power supply module's power cable, refer to "Power Cable" on Page 211.

Table: Power Supplies of SG-6000-A3700

| Power Supply Specification | Power Supply Type | Input Voltage Range | Maximum Output Power of a Single Power Supply |
|---|---|---|---|
| Single AC (default)<br>Single DC (optional)<br>Dual (1+1 redundancy)<br>AC (optional) | Fixed | AC: 100~240V AC, 50/60Hz and HVDC: 127~373 HVDC<br>DC: -36 ~ -72V DC | 150W |

## SSD

SSD on the device is mainly used for saving logs to the local for device monitoring, behavior auditing, etc.

SG-6000-A3700 does not come with a hard disk; you can purchase and install hard disks with different storage capacities as needed.

SSD View:

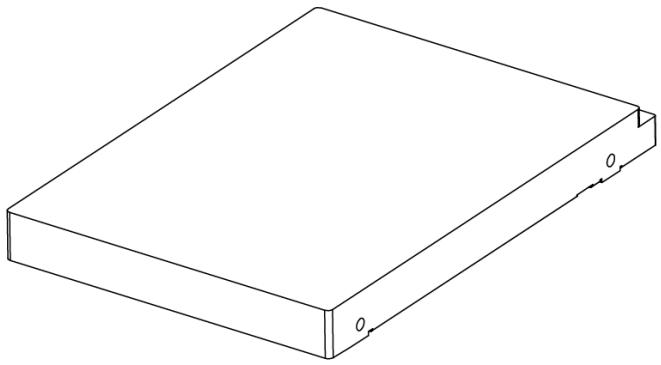

Table: SSD Types and Storage Capacity

| Type | Size | Storage Capacity |
|---|---|---|
| SSD | 2.5 inches | 3.84T/1.92T/960G/480G |

**Related Topics:**

- For instructions on installing the SSD, refer to Installing/Removing/Replacing the SSD .

Note:

- The device only supports the original Hillstone SSD. Installing a non-original SSD may cause abnormal running of the device. To purchase an original SSD, contact your sales representative.
- Due to differences in SSD capacity calculation methods, the operating system uses a binary algorithm, calculating 1MB as 1024KB, whereas the manufacturer’s nominal capacity calculates 1MB as 1000KB and accounts for file system overhead. Therefore, there may be a discrepancy between the displayed and nominal capacities of the SSD. The capacity that is displayed prevails.

## Cooling System

SG-6000-A3700 device includes 4 built-in fans that are not removable. The air inlet of the cooling system is located on the front panel. The air that passes through the device will be discharged from the air outlet on the back panel. To ensure the cooling system works normally, leave adequate space around the device.

Figure: Air Circulation

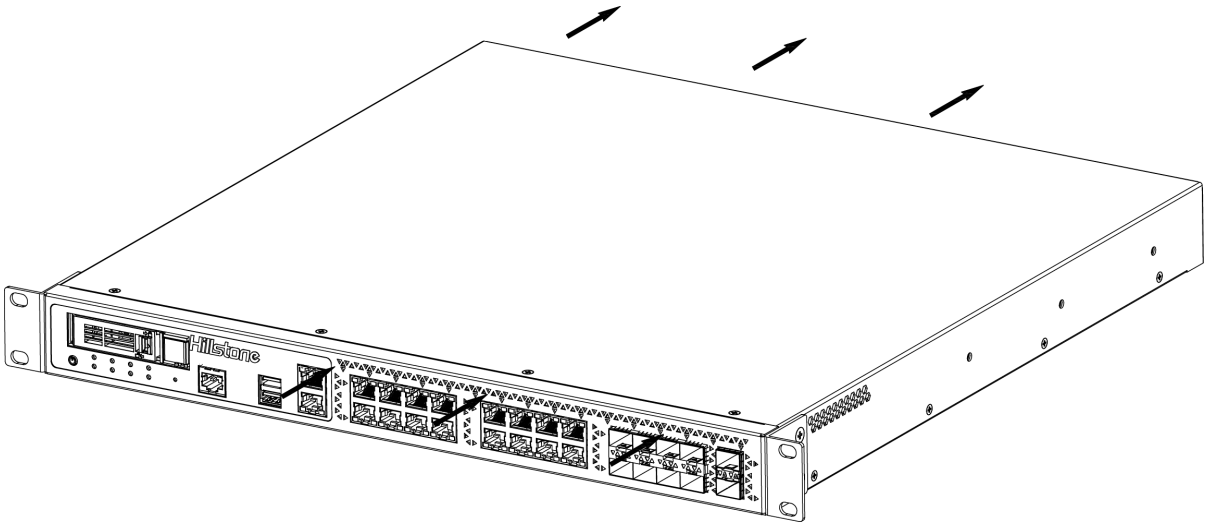

The ambient temperature should be kept between 0 and 40 degrees Celsius. If a fan works abnormally, the FAN LED will turn solid red, and then you should replace the fan/fan tray with a new one.

**Note:** The persistent abnormal fan will cause the system to be unable to dissipate heat in time. If the internal temperature is too high, the system will power off and the current configurations will not be saved.

## Available Expansion Module

The back panel of SG-6000-A3700 provides a expansion slot. The following table lists the supported expansion modules and the compatible transceiver modules. To use a supported expansion module, install the module into the device's expansion slot.

**Related Topics:**

- For a detailed introduction to the expansion module, refer to "Expansion Modules" on Page 224.
- For instructions on how to install and remove expansion modules, refer to "Installing and Removing the Expansion Module" on Page 326.

| Available Types of Expansion Modules | Expansion Module Models | Compatible Transceiver Modules |
|---|---|---|
| Interface module | IOC-A-2QSFP+(Without Bypass) | "40GE(QSFP+)Transceiver Module" on Page 263<br>**Note:** When the expansion module uses the TRAN-SR-QSFP+ transceiver |

| Available Types of Expansion Modules | Expansion Module Models | Compatible Transceiver Modules |
| --- | --- | --- |
| | | module, you cannot use the **channel-speed 10000** command to split into four 10Gbps channels. |
| | IOC-A-4SFP+(Without Bypass) | "10GE(SFP+) Transceiver Modules" on Page 254<br>Use the "1GE(SFP) Transceiver Module" on Page 243/"Copper SFP Module" on Page 252 after speed reduction.<br>**Note:** The transceiver modules TRAN-SFP+-LX40 and TRAN-SFP+-LX80 are not supported. |
| Bypass module | IOC-A-2MM-BE<br>IOC-A-2SM-BE | - |

# SG-6000-A3615

SG-6000-A3615 device is designed to fit in standard 19-inch cabinets/racks. The mounting rail assemblies are included with the device, They can not only be installed in a standard 19-inch cabinet/rack with a tray or mounting rail assemblies, but also be placed on a workbench.


- Front Panel
- Back Panel
- Ports
- LED
- Buttons
- System Parameters
- Power
- SSD
- Cooling System
- Available Expansion Module


## Front Panel

he front panel of SG-6000-A3615 consists of 1 power button, 1 SSD expansion slot, 1 general expansion slot, 1 CLR button, 2 USB3.0 ports, 1 Console port, 1 MGT port, 1 HA port, ports 0-7 are GE RJ45 ports (ports 4/5, and ports 6/7 are bypassed to each other), ports 8-15 are GE(SFP) ports, several LED indicators (1 Power LED, 1 Status LED, 1 Alarm LED, 1 HA Status LED, 2 Power supply LED, 1 SSD LED, and 1 Fan LED), and several air inlets.

Figure: SG-6000-A3615 (dual power supplies) Front Panel

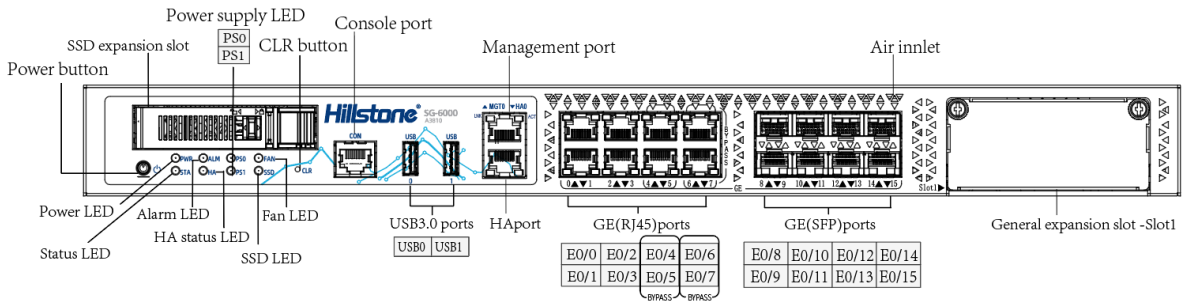


**Related Topics:**

- For instructions of ports, refer to Ports.
- For instructions of LED Indicators on the front panel, refer to LED.
- For information on how to use the power button and CLR button on the front panel, refer to Buttons.
- For information about the expansion modules available for general expansion slot, refer to Available Expansion Module.

## Back Panel

The back panel of SG-6000-A3615 consists of 2 power sockets (devices with dual power supplies have 2 power sockets, while devices with single power supply only have 1 power socket), 4 built-in fans, 1 general expansion slot, and 1 grounding screw.

Figure: SG-6000-A3615 (dual power supplies) Back Panel

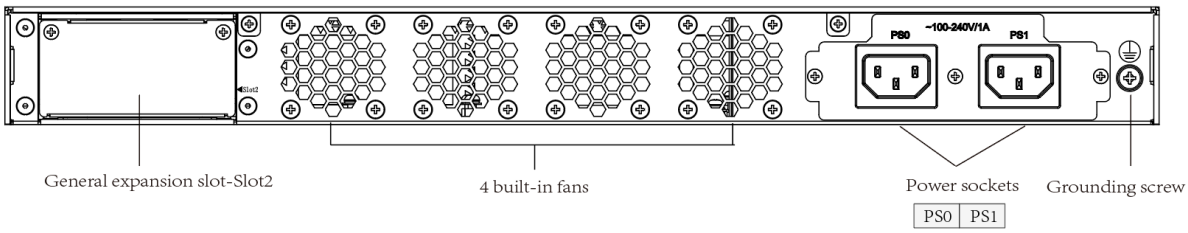


**Related Topics:**

- For information about the expansion modules available for general expansion slot, refer to Available Expansion Module.

## Ports

Note:

- The original Hillstone optical module should not be used together with optical modules from other manufacturers, otherwise some errors may occur.
- Before you use the transceiver module, we strongly recommend that you upgrade the device system to a specified version based on the SN format of the transceiver module. This way, you can prevent the transceiver module from being affected by version incompatibility. See Supported Versions for Transceiver Module.
- To avoid dust falling into the port socket, you should place a rubber dust cap (originally in the accessory box) over the port.

### *Fixed Ports*

Explanation of Corresponding Relationships for Fixed Ports of SG-6000-A3615.

Table: Explanation of Corresponding Relationships for Fixed Ports of SG-6000-A3615

| Port Type/Number | Port Attributes | Compatible Transceiver Modules |
|---|---|---|
| eight GE(RJ45) ports (2 pairs of bypass) | Connector: RJ-45<br>Port Standard: Auto-MDI/MDIX (crossover cable and straight-through cable autosensing)<br>Frame Format: Ethernet_II/Eth- | - |

| Port Type/Number | Port Attributes | Compatible Transceiver Modules |
|---|---|---|
| | ernet_SNAP<br>Negotiation Mode:<br>10/100/1000Mbps autosensing,<br>Full/half-duplex | |
| 8 GE(SFP) ports | Connector: SFP<br>Frame Format: Ethernet_II/Eth-ernet_SNAP<br>工作方式：<br>• SFP optical module: 1000Mbps<br>• SFP copper module: 1000Mbps ,Full-duplex | "1GE(SFP) Transceiver Module" on Page 243/"Copper SFP Mod-ule" on Page 252 |

### *Management Ports*

The management port description of the SG-6000-A3615 device is shown in the table below.

Table: Explanation of Corresponding Relationships for Management Ports of SG-6000-A3615

| Port Type/Number | Port Attributes | Compatible Transceiver Modules |
|---|---|---|
| 1 MGT port | - | - |
| 1 HA port | Connector: RJ-45<br>Port Standard: Auto-MDI/MDIX (crossover cable and straight-through cable autosensing) | - |

| Port Type/Number | Port Attributes | Compatible Transceiver Modules |
| --- | --- | --- |
| | Frame Format: Ethernet_II/Ethernet_SNAP<br>Negotiation Mode: 10/100/1000Mbps autosensing, Full/half-duplex | |
| 1 Console port | The device provides an RS-232C asynchronous serial console port for you to configure the device.<br>Connector: RJ-45<br>Port Standard: RS-232C<br>Baud Rate: 115200 bit/s<br>Services: Connect the CON port to the serial port of a PC and run a terminal emulation program on the PC to configure the device<br>Transmission Medium: Console cable | - |
| 2 USB 3.0ports | Connector: USB Type-A interface<br>Port Standard: USB 3.0 host interface<br>Negotiation Mode:1.1/2.0/3.0 autosensing | - |

## LED

The following table describes the meanings of LED indicators on the front panels of SG-6000-A3615.

Note:

- The STA LED will remain OFF when there is a boot failure caused by OS software damage. Contact your sales representative if this occurs.

Table: Front Panel LED Descriptions

| LED | LED Name | Color/Status | Description |
|---|---|---|---|
| PWR | Power LED | Green/Always on | The device power is running normally. |
| | | Orange/Red/Always on | The device power is running abnormally. |
| | | Off | The device is powered off. |
| STA | Status LED | Green/Blinking | The system is running normally. |
| | | Off | The system has not been booted/is booting/has failed to boot. |

| LED | LED Name | Color/Status | Description |
|---|---|---|---|
| ALM | Alarm LED | Red/Always on | The system is sending alarm(s). |
| | | Green/Blinking | The system is waiting. |
| | | Off | The system is running normally. |
| | | Orange/Blinking | The system is using a trial license. |
| | | Orange | The trial license has expired and there is no legitimate license installed in the system. |
| PS0 (Single power supply) | Power supply LED | Green/Always on | Power Supply PS0 is running normally. |
| | | Off | Power Supply PS0 is powered off or has failed. |
| PS0, PS1 (Dual power supply) | Power supply LED | PS0: Green/Always on PS1: Green/Always on | Power Supply PS0 and PS1 are running normally. |
| | | PS0: Green/Always on, PS1: Red/Always on | Power Supply PS0 is running normally, Power Supply PS1 is powered off or has failed. |
| | | PS0: Red/Always on, PS1: Green/Always on | Power Supply PS0 is powered off or has failed, Power Supply PS1 is running normally. |
| | | PS0: Off, PS1: Off | Power Supply PS0 and PS1 are powered off or have failed. |
| HA | HA LED | Green/Always on | Not using HA. This device is the |

| LED | LED Name | Color/Status | Description |
|---|---|---|---|
| | | | master device. |
| | | Green/Blinking | Two devices are in an HA cluster. This device is working as the master. |
| | | Orange/Blinking | Two devices are in an HA cluster. This device is working as the slave. |
| | | Red/Blinking | HA function has failed. |
| FAN | FAN LED | Green/Always on | The cooling system is running normally. |
| | | Red/Always on | One of the fans has failed or one of the fan trays is not present. |
| SSD | SSD LED | Green/Blinking | SSD is transmitting data. |
| | | Off | SSD is not present or no data is transmitted. |
| LNK | LNK LED | Green/Always on | The link between this port and its peer device is in normal status. |
| | | Off | The link between this port and its peer device has failed or there is no connection. |
| ACT | ACT LED | Orange/Blinking | The port is sending or receiving data. |
| | | Off | No data is transmitted on this port. |

## Buttons

SG-6000-A3615 device includes two buttons, namely the power button and the CLR button.

### *Power Button*

The power button on the front panel of the SG-6000-A3615 is used for shutting down and restarting after shutting down.

- Shutdown: Long press the power button for about 5 seconds. When the PWR LED changes from blinking green to red or orange and the blue power button indicator is off, system is shut down and the power cord can be removed.
- Restart: After being connected to the power supply by the power cord for the first time, the device will automatically start up. If the device is shut down by pressing the power button or using the shutdown command, and the power cord has not been disconnected after shutdown, you can press the power button to power on the device.

### *CLR Button*

The CLR button on the front panel of SG-6000-A3615 is the pinhole of the front panel and is used to reset the device back to the factory default settings. You can restore access to the device with this button if the login password is lost.

> **Note:** Use this button with caution. Resetting the device will clear all existing configurations.

To restore the factory default settings, take the following steps:

1. After powering on the device, when the system is in operation, use a pin to gently press the CLR button in the pinhole.
2. Wait for the CON port to print the message "Clear button is pressed, the machine will power down," and observe that the STA and ALM LEDs both turn to a solid red. Once the STA

and ALM LEDs go out, the device will restart, and during the startup process, the CON port will print the message "CLR button pressed."

3. Once the restart is completed, the factory settings will be restored.

## System Parameters

The following table lists the system parameters of SG-6000-A3615:

Table: System Parameters of SG-6000-A3615

| Item | Description |
|---|---|
| **System Parameters** | |
| Flash Memory | 8GB |
| **Dimensions and Weight** | |
| Height | 1U |
| Dimensions (W × D × H)<br>**Note:**In the data, the width of the device does not include that of rack-mounting ear; the depth of the device does not include that of front and back captive screw and washer; the height of the device does not include that of foot pad. | W436.0mm * D459.5mm * H44.4mm |
| Weight | Net weight: 6.195kg<br>Gross weight:10.23kg (accessories and packages included) |

| Item | Description |
|---|---|
| **Rated Power Consumption** | |
| Rated Power Consumption | 90W |
| **Environmental Parameters** | |
| Ambient Temperature | 0℃~40℃ |
| Relative Humidity | 10%~95% (non-condensing) |

## Power

SG-6000-A3615 uses a fixed power supply that is connected to the external power supply via power cables. The fixed power supply cannot be replaced. Various power supply specifications are available, allowing you to choose between AC single power or AC dual power with 1+1 redundancy as needed.

Dual power supply (1+1 redundancy) : When two power supplies are connected at the same time, the two power supplies work simultaneously. If one power supply fails during operation, the other power supply takes over all the work to prevent losses caused by power failure. The two power supplies are mutually backup.

**Related Topics:**

- For instructions on connecting the power supply module's power cable, refer to "Power Cable" on Page 211.

Table: Power Supplies of SG-6000-A3615

| Power Supply Specification | Power Supply Type | Input Voltage Range | Maximum Output Power of a Single Power Supply |
|---|---|---|---|
| Single AC (default)<br>Dual (1+1 redundancy) | Fixed | AC: 100~240V AC, 50/60Hz and HVDC: | 150W |

| Power Supply Specification | Power Supply Type | Input Voltage Range | Maximum Output Power of a Single Power Supply |
|---|---|---|---|
| AC (optional) | | 127~373 HVDC | |

## SSD

SSD on the device is mainly used for saving logs to the local for device monitoring, behavior auditing, etc.

SG-6000-A3615 does not come with a hard disk; you can purchase and install hard disks with different storage capacities as needed.

SSD View:

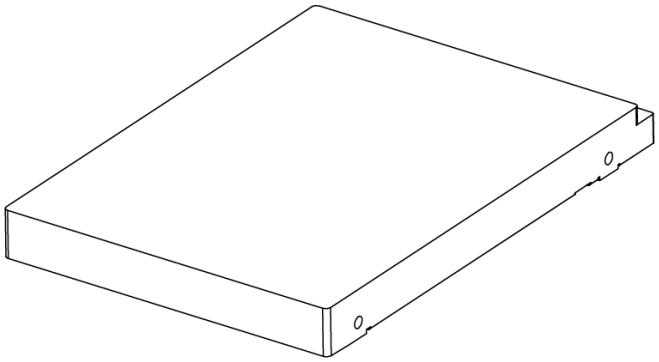

Table: SSD Types and Storage Capacity

| Type | Size | Storage Capacity |
|---|---|---|
| SSD | 2.5 inches | 3.84T/1.92T/960G/480G |

**Related Topics:**

- For instructions on installing the SSD, refer to Installing/Removing/Replacing the SSD .

**Note:** The device only supports the original Hillstone SSD. Installing a non-original SSD may cause abnormal running of the device. Only certain models have an SSD installed in place in the factory. To purchase an original SSD, contact your sales representative.

## Cooling System

SG-6000-A3615 device includes 4 built-in fans that are not removable. The air inlet of the cooling system is located on the front panel. The air that passes through the device will be discharged from the air outlet on the back panel. To ensure the cooling system works normally, leave adequate space around the device.

Figure: Air Circulation

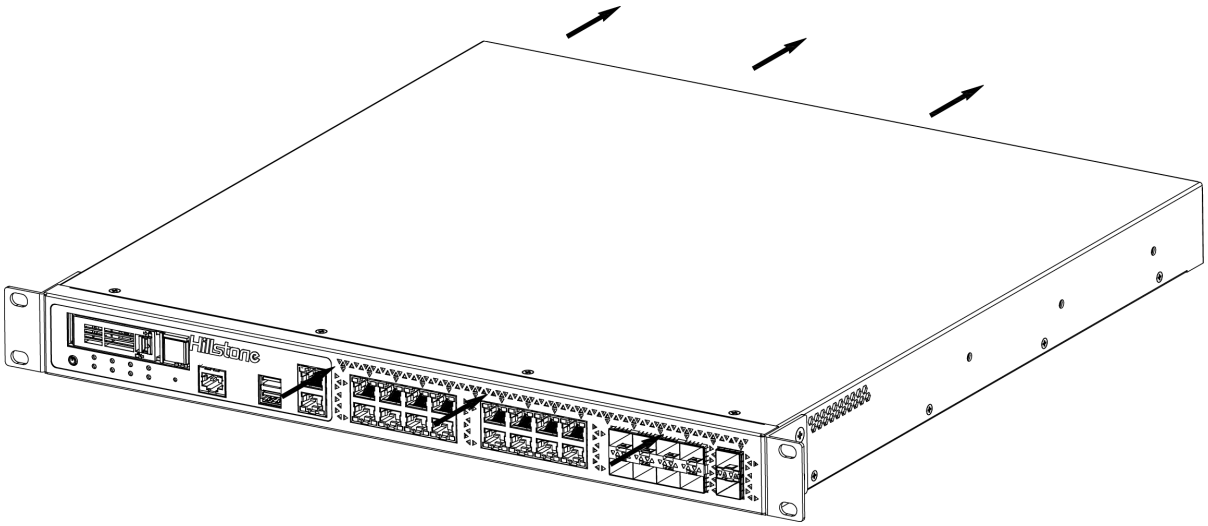


The ambient temperature should be kept between 0 and 40 degrees Celsius. If a fan works abnormally, the FAN LED will turn solid red, and then you should replace the fan/fan tray with a new one.

**Note:** The persistent abnormal fan will cause the system to be unable to dissipate heat in time. If the internal temperature is too high, the system will power off and the current configurations will not be saved.

## Available Expansion Module

SG-6000-A3615 provides one expansion slot on both the front panel and the back panel. The following table lists the supported expansion modules and the compatible transceiver modules. To use a supported expansion module, install the module into the device's expansion slot.

**Related Topics:**

- For a detailed introduction to the expansion module, refer to "Expansion Modules" on Page 224.
- For instructions on how to install and remove expansion modules, refer to "Installing and Removing the Expansion Module" on Page 326.

| Available Types of Expansion Modules | Expansion Slot Location | Expansion Module Models | Compatible Transceiver Modules |
|---|---|---|---|
| Interface module | Expansion Slot of Front Panel | IOC-A-F-4SFP+ (Without Bypass)<br>IOC-A-F-8SFP+ (Without Bypass) | "10GE(SFP+) Transceiver Modules" on Page 254<br>Use the "1GE(SFP) Transceiver Module" on Page 243/"Copper SFP Module" on Page 252 after speed reduction. |
| | | IOC-A-F-8GE(4对Bypass) | - |
| | Expansion Slot of Back Panel | IOC-A-2QSFP+ (Without Bypass) | "40GE(QSFP+)Transceiver Module" on Page 263<br>**Note:** When the expansion module uses the TRAN-SR- |

| Available Types of Expansion Modules | Expansion Slot Location | Expansion Module Models | Compatible Transceiver Modules |
|---|---|---|---|
| | | | QSFP+ transceiver module, you cannot use the **channel-speed 10000** command to split into four 10Gbps channels. |
| | | IOC-A-4SFP+ (Without Bypass) | "10GE(SFP+) Transceiver Modules" on Page 254Use the "1GE(SFP) Transceiver Module" on Page 243/"Copper SFP Module" on Page 252 after speed reduction.<br>**Note:** The transceiver modules TRAN-SFP+-LX40 and TRAN-SFP+-LX80 are not supported. |
| Bypass module | Expansion Slot of Back Panel | IOC-A-2MM-BE<br>IOC-A-2SM-BE | - |

# SG-6000-A3600/A3000

SG-6000-A3600/A3000 device is designed to fit in standard 19-inch cabinets/racks. The mounting rail assemblies are included with the device, They can not only be installed in a standard 19-inch cabinet/rack with a tray or mounting rail assemblies, but also be placed on a workbench.

- Front Panel
- Back Panel
- Ports
- LED
- Buttons
- System Parameters
- Power
- SSD
- Cooling System

## Front Panel

The front panel of SG-6000-A3600/A3000 consists of 1 power button, 1 SSD expansion slot, 1 CLR button, 2 USB 3.0 ports, 1 Console port, 1 MGT port, 1 HA port, ports 0-15 are GE RJ45 ports (ports 12/13, and ports 14/15 are bypassed to each other), ports 16-23 are GE SFP ports, ports 24-25 are 10GE SFP+ ports, 1 Power LED, 1 Status LED, 1 Alarm LED, 1 HA LED, 2 Power supply LED (For A3700/A3600/A3000, devices with dual power supplies have 2 power supply LED PS0 and PS1, while devices with single power supply only have 1 power supply LED PS0), 1 SSD LED, and 1 Fan LED, and several air inlets.

Figure: SG-6000-A3600 (dual power supplies) /A3000 (dual power supplies) Front Panel

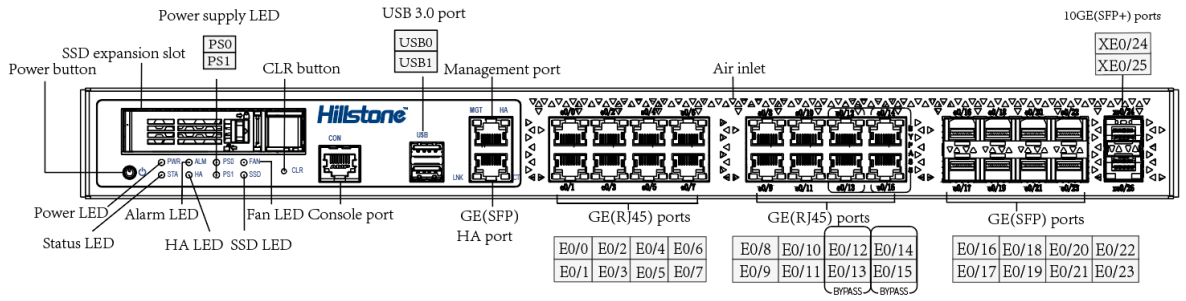


**Related Topics:**

- For instructions of ports, refer to Ports.
- For instructions of LED Indicators on the front panel, refer to LED.
- For information on how to use the power button and CLR button on the front panel, refer to Buttons.

## Back Panel

The back panel of SG-6000-A3600/A3000 consists of 2 power sockets (devices with dual power supplies have 2 power sockets, while devices with single power supply only have 1 power socket), 4 built-in fans, and 1 grounding screw.

Figure: SG-6000-A3600 (dual power supplies) /A3000 (dual power supplies) Back Panel

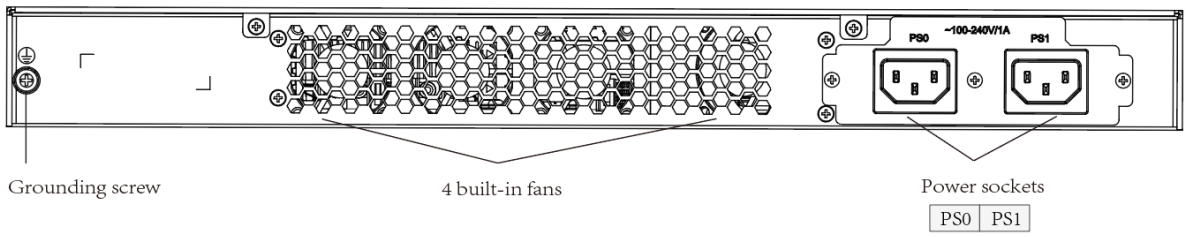

## Ports

Note:

- The original Hillstone optical module should not be used together with optical modules from other manufacturers, otherwise some errors may occur.
- Before you use the transceiver module, we strongly recommend that you upgrade the device system to a specified version based on the SN format of the transceiver module. This way, you can prevent the transceiver module from being affected by version incompatibility. See Supported Versions for Transceiver Module.
- To avoid dust falling into the port socket, you should place a rubber dust cap (originally in the accessory box) over the port.

### *Fixed Ports*

Explanation of Corresponding Relationships for Fixed Ports of SG-6000-A3600/A3000.

Table: Explanation of Corresponding Relationships for Fixed Ports of SG-6000-A3600/A3000

| Port Type/Number | Port Attributes | Compatible Transceiver Modules |
|---|---|---|
| 16 Gigabyte Ethernet ports(2 pairs of bypass) | Connector: RJ-45<br>Port Standard: Auto-MDI/MDIX (crossover cable and straight-through cable autosensing)<br>Frame Format: Ethernet_II/Ethernet_SNAP<br>Negotiation Mode: 10/100/1000Mbps autosensing, Full/half-duplex | - |

| Port Type/Number | Port Attributes | Compatible Transceiver Modules |
| --- | --- | --- |
| 8 GE(SFP) ports | Connector: SFP<br>Frame Format: Ethernet_II/Ethernet_SNAP<br>Negotiation Mode:<br>• SFP optical module: 1000Mbps<br>• SFP copper module: 1000Mbps ,Full-duplex | "1GE(SFP) Transceiver Module" on Page 243/"Copper SFP Module" on Page 252 |
| 2个10GE SFP+ports | Connector: SFP+<br>Frame Format: Ethernet_II/Ethernet_SNAP<br>Negotiation Mode:<br>• SFP+ optical module: 10Gbps<br>• SFP optical module: 1000Mbps<br>• SFP copper module: 1000Mbps, Full-duplex | "10GE(SFP+) Transceiver Modules" on Page 254<br>Use the "1GE(SFP) Transceiver Module" on Page 243/"Copper SFP Module" on Page 252at a reduced speed of 1Gbps. |

### *Management Ports*

The management port description of the SG-6000-A3600/A3000 device is shown in the table below.

Table: Explanation of Corresponding Relationships for Management Ports of SG-6000-A3600/A3000

| Port Type/Number | Port Attributes | Compatible Transceiver Modules |
|---|---|---|
| 1 MGT port | - | - |
| 1 HA port | Connector: RJ-45<br>Port Standard: Auto-MDI/MDIX (crossover cable and straight-through cable autosensing)<br>Frame Format: Ethernet_II/Ethernet_SNAP<br>Negotiation Mode: 10/100/1000Mbps autosensing, Full/half-duplex | - |
| 1 Console port | The device provides an RS-232C asynchronous serial console port for you to configure the device.<br>Connector: RJ-45<br>Port Standard: RS-232C<br>Baud Rate: 115200 bit/s<br>Services: Connect the CON port to the serial port of a PC and run a terminal emulation program on the PC to configure the device<br>Transmission Medium: Console cable | - |
| 2 USB 3.0ports | Connector: USB Type-A interface<br>Port Standard: USB 3.0 host inter- | - |

| Port Type/Number | Port Attributes | Compatible Transceiver Modules |
|---|---|---|
| | face<br>Negotiation Mode:1.1/2.0/3.0 auto-sensing | |

## LED

The following table describes the meanings of LED indicators on the front panels of SG-6000-A3600/A3000.

Note:

- The STA LED will remain OFF when there is a boot failure caused by OS software damage. Contact your sales representative if this occurs.
- For a port with a bandwidth of 10G, a blinking or solid ACT LED indicates that the port is sending or receiving data.

Table: Front Panel LED Descriptions of SG-6000-A3600/A3000

| LED | LED Name | Color/Status | Description |
|---|---|---|---|
| PWR | Power LED | Green/Always on | The device power is running normally. |
| | | Orange/Red/Always on | The device power is running abnormally. |
| | | Off | The device is powered off. |

| LED | LED Name | Color/Status | Description |
|---|---|---|---|
| STA | Status LED | Green/Blinking | The system is running normally. |
| | | Off | The system has not been booted/is booting/has failed to boot. |
| ALM | Alarm LED | Red/Always on | The system is sending alarm(s). |
| | | Green/Blinking | The system is waiting. |
| | | Off | The system is running normally. |
| | | Orange/Blinking | The system is using a trial license. |
| | | Orange | The trial license has expired and there is no legitimate license installed in the system. |
| PS0 (Single power supply) | Power supply LED | Green/Always on | Power Supply PS0 is running normally. |
| | | Off | Power Supply PS0 is powered off or has failed. |
| PS0, PS1 (Dual power supply) | Power supply LED | PS0: Green/Always on<br>PS1: Green/Always on | Power Supply PS0 and PS1 are running normally. |
| | | PS0: Green/Always on,<br>PS1: Red/Always on | Power Supply PS0 is running normally, Power Supply PS1 is powered off or has failed. |
| | | PS0: Red/Always on, PS1: Green/Always on | Power Supply PS0 is powered off or has failed, Power Supply PS1 is running normally. |

| LED | LED Name | Color/Status | Description |
|---|---|---|---|
| | | PS0: Off, PS1: Off | Power Supply PS0 and PS1 are powered off or have failed. |
| HA | HA LED | Green/Always on | Not using HA. This device is the master device. |
| | | Green/Blinking | Two devices are in an HA cluster. This device is working as the master. |
| | | Orange/Blinking | Two devices are in an HA cluster. This device is working as the slave. |
| | | Red/Blinking | HA function has failed. |
| FAN | FAN LED | Green/Always on | The cooling system is running normally. |
| | | Red/Always on | One of the fans has failed or one of the fan trays is not present. |
| SSD | SSD LED | Green/Blinking | SSD is transmitting data. |
| | | Off | SSD is not present or no data is transmitted. |
| LNK | LNK LED | Green/Always on | The link between this port and its peer device is in normal status. |
| | | Off | The link between this port and its peer device has failed or there is no connection. |

| LED | LED Name | Color/Status | Description |
|---|---|---|---|
| ACT | ACT LED | Orange/Blinking | The port is sending or receiving data. |
| | | Off | No data is transmitted on this port. |

## Buttons

SG-6000-A3600/A3000 device includes two buttons, namely the power button and the CLR button.

### *Power Button*

The power button on the front panel of the SG-6000-A3600/A3000 is used for shutting down and restarting after shutting down.

- Shutdown: Long press the power button for about 5 seconds. When the PWR LED changes from blinking green to red or orange and the blue power button indicator is off, system is shut down and the power cord can be removed.
- Restart: After being connected to the power supply by the power cord for the first time, the device will automatically start up. If the device is shut down by pressing the power button or using the shutdown command, and the power cord has not been disconnected after shutdown, you can press the power button to power on the device.

### *CLR Button*

The CLR button on the front panel of SG-6000-A3600/A3000 is the pinhole of the front panel and is used to reset the device back to the factory default settings. You can restore access to the device with this button if the login password is lost.

**Note:** Use this button with caution. Resetting the device will clear all existing configurations.

To restore the factory default settings, take the following steps:

1. After powering on the device, when the system is in operation, use a pin to gently press the CLR button in the pinhole.
2. Wait for the CON port to print the message "Clear button is pressed, the machine will power down," and observe that the STA and ALM LEDs both turn to a solid red. Once the STA and ALM LEDs go out, the device will restart, and during the startup process, the CON port will print the message "CLR button pressed."
3. Once the restart is completed, the factory settings will be restored.

## System Parameters

The following table lists the system parameters of SG-6000-A3600/A3000:

Table: System Parameters of SG-6000-A3600/A3000

| Item | Description |
|---|---|
| **System Parameters** | |
| Flash Memory | 8GB |
| **Dimensions and Weight** | |
| Height | 1U |
| Dimensions (W × D × H)<br>**Note:**In the data, the width of the device does not include that of rack-mounting ear; the depth of the device does not include that of front and back captive screw and washer; the height of the device does not | W436.0mm * D437.0mm * H44.0mm |

| Item | Description |
| --- | --- |
| include that of foot pad. | |
| Weight | Net weight: 6.0kg<br>Gross weight:9.4kg (accessories and packages included) |
| **Rated Power Consumption** | |
| Rated Power Consumption | 100W |
| **Environmental Parameters** | |
| Ambient Temperature | 0℃~40℃ |
| Relative Humidity | 10%~95% (non-condensing) |

## Power

SG-6000-A3600/A3000 uses a fixed power supply that is connected to the external power supply via power cables. The fixed power supply cannot be replaced. Various power supply specifications are available, allowing you to choose between DC/AC single power or AC dual power with 1+1 redundancy as needed.

Dual power supply (1+1 redundancy) : When two power supplies are connected at the same time, the two power supplies work simultaneously. If one power supply fails during operation, the other power supply takes over all the work to prevent losses caused by power failure. The two power supplies are mutually backup.

**Related Topics:**

- For instructions on connecting the power supply module's power cable, refer to "Power Cable" on Page 211.

Table: Power Supplies of SG-6000-A3600/A3000

| Power Supply Specification | Power Supply Type | Input Voltage Range | Maximum Output Power of a Single Power Supply |
|---|---|---|---|
| Single AC (default)<br>Single DC (optional)<br>Dual (1+1 redundancy)<br>AC (optional) | Fixed | AC: 100~240V AC, 50/60Hz and HVDC: 127~373 HVDC<br>DC: -36 ~ -72V DC | 150W |

## SSD

SSD on the device is mainly used for saving logs to the local for device monitoring, behavior auditing, etc.

SG-6000-A3600/A3000 does not come with a hard disk; you can purchase and install hard disks with different storage capacities as needed.

SSD View:

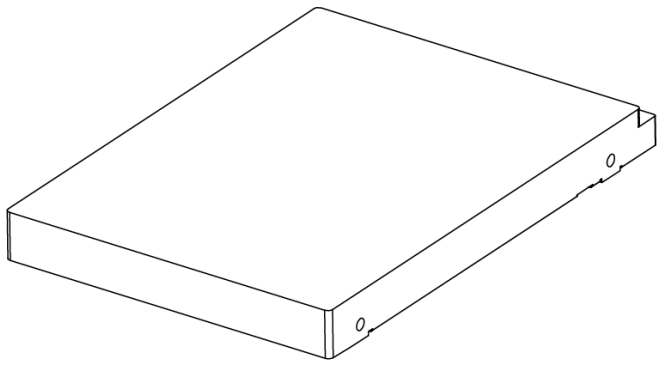

Table: SSD Types and Storage Capacity

| Type | Size | Storage Capacity |
|---|---|---|
| SSD | 2.5 inches | 3.84T/1.92T/960G/480G |

**Related Topics:**

- For instructions on installing the SSD, refer to Installing/Removing/Replacing the SSD .

Note:

- The device only supports the original Hillstone SSD. Installing a non-original SSD may cause abnormal running of the device. To purchase an original SSD, contact your sales representative.
- Due to differences in SSD capacity calculation methods, the operating system uses a binary algorithm, calculating 1MB as 1024KB, whereas the manufacturer’ s nominal capacity calculates 1MB as 1000KB and accounts for file system overhead. Therefore, there may be a discrepancy between the displayed and nominal capacities of the SSD. The capacity that is displayed prevails.

## Cooling System

SG-6000-A3600/A3000 device includes 4 built-in fans that are not removable. The air inlet of the cooling system is located on the front panel. The air that passes through the device will be discharged from the air outlet on the back panel. To ensure the cooling system works normally, leave adequate space around the device.

Figure: Air Circulation

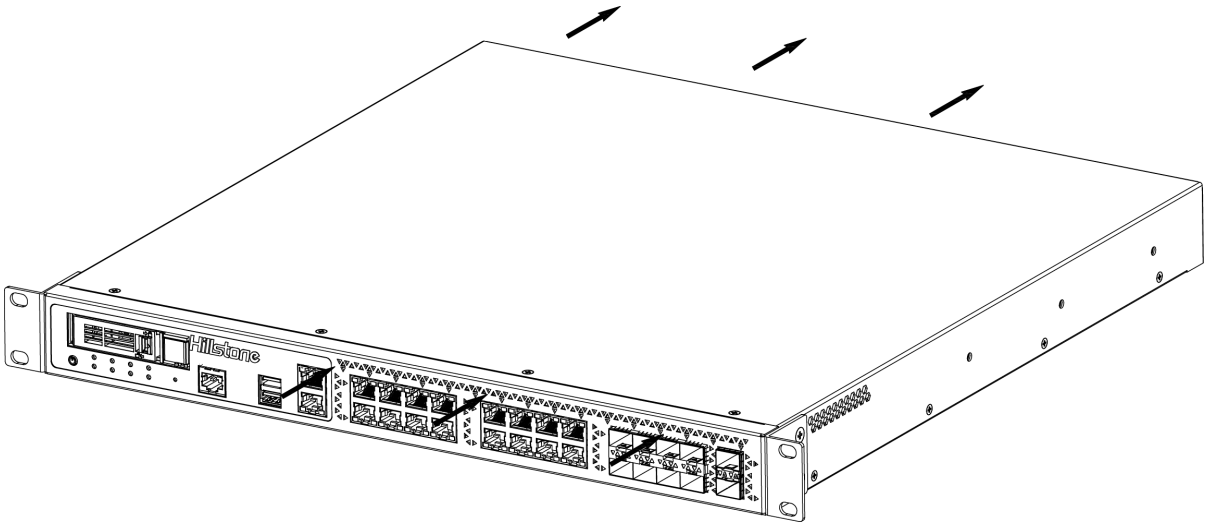

The ambient temperature should be kept between 0 and 40 degrees Celsius. If a fan works abnormally, the FAN LED will turn solid red, and then you should replace the fan/fan tray with a new one.

**Note:** The persistent abnormal fan will cause the system to be unable to dissipate heat in time. If the internal temperature is too high, the system will power off and the current configurations will not be saved.

# SG-6000-A2815/A2715

SG-6000-A2815/A2715 device is designed to fit in standard 19-inch cabinets/racks. The mounting rail assemblies are included with the device, They can not only be installed in a standard 19-inch cabinet/rack with a tray or mounting rail assemblies, but also be placed on a workbench.


- Front Panel
- Back Panel
- Ports
- LED
- Buttons
- System Parameters
- Power
- SSD
- Cooling System
- Available Expansion Module


## Front Panel

The front panel of SG-6000-A2815/A2715 consists of 1 power button, 1 SSD expansion slot, 1 general expansion slot, 1 CLR button, 2 USB3.0 ports, 1 Console port, 1 MGT port, 1 HA port, ports 0-7 are GE RJ45 ports (ports 4/5, and ports 6/7 are bypassed to each other), ports 8-15 are GE(SFP) ports, several LED indicators (1 Power LED, 1 Status LED, 1 Alarm LED, 1 HA Status LED, 2 Power supply LED, 1 SSD LED, and 1 Fan LED), and several air inlets.

Figure: SG-6000-A2815 (dual power supplies)/A2715 (dual power supplies) Front Panel

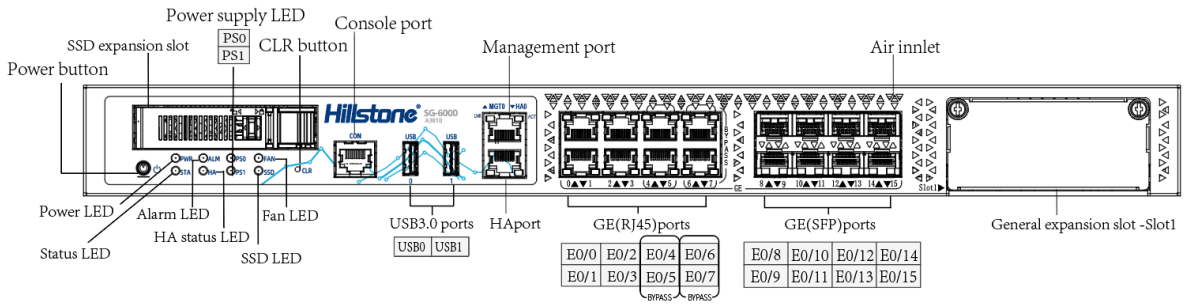


**Related Topics:**

- For instructions of ports, refer to Ports.
- For instructions of LED Indicators on the front panel, refer to LED.
- For information on how to use the power button and CLR button on the front panel, refer to Buttons.
- For information about the expansion modules available for general expansion slot, refer to Available Expansion Module.

## Back Panel

The back panel of SG-6000-A2815/A2715 consists of 2 power sockets (devices with dual power supplies have 2 power sockets, while devices with single power supply only have 1 power socket), 3 built-in fans, and 1 grounding screw.

Figure: SG-6000-A2815 (dual power supplies)/A2715 (dual power supplies) Back Panel

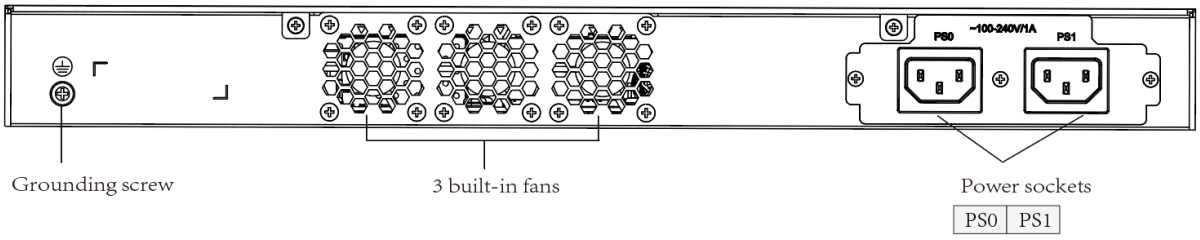

## Ports

Note:

- The original Hillstone optical module should not be used together with optical modules from other manufacturers, otherwise some errors may occur.
- Before you use the transceiver module, we strongly recommend that you upgrade the device system to a specified version based on the SN format of the transceiver module. This way, you can prevent the transceiver module from being affected by version incompatibility. See Supported Versions for Transceiver Module.
- To avoid dust falling into the port socket, you should place a rubber dust cap (originally in the accessory box) over the port.

### *Fixed Ports*

Explanation of Corresponding Relationships for Fixed Ports of SG-6000-A2815/A2715.

Table: Explanation of Corresponding Relationships for Fixed Ports of SG-6000-A2815/A2715

| Port Type/Number | Port Attributes | Compatible Transceiver Modules |
|---|---|---|
| eight GE(RJ45) ports (2 pairs of bypass) | Connector: RJ-45<br>Port Standard: Auto-MDI/MDIX (crossover cable and straight-through cable autosensing)<br>Frame Format: Ethernet_II/Ethernet_SNAP<br>Negotiation Mode: 10/100/1000Mbps autosensing, Full/half-duplex | - |

| Port Type/Number | Port Attributes | Compatible Transceiver Modules |
| --- | --- | --- |
| 8 GE(SFP) ports | Connector: SFP<br>Frame Format: Ethernet_II/Ethernet_SNAP<br>Negotiation Mode:<br>• SFP optical module: 1000Mbps<br>• SFP copper module: 1000Mbps ,Full-duplex | "1GE(SFP) Transceiver Module" on Page 243/"Copper SFP Module" on Page 252 |

### *Management Ports*

The management port description of the SG-6000-A2815/A2715 device is shown in the table below.

Table: Explanation of Corresponding Relationships for Management Ports of SG-6000-A2815/A2715

| Port Type/Number | Port Attributes | Compatible Transceiver Modules |
| --- | --- | --- |
| 1 MGT port | - | - |
| 1 HA port | Connector: RJ-45<br>Port Standard: Auto-MDI/MDIX (crossover cable and straight-through cable autosensing)<br>Frame Format: Ethernet_II/Ethernet_SNAP<br>Negotiation Mode: | - |

| Port Type/Number | Port Attributes | Compatible Transceiver Modules |
| --- | --- | --- |
| | 10/100/1000Mbps autosensing, Full/half-duplex | |
| 1 Console port | The device provides an RS-232C asynchronous serial console port for you to configure the device.<br>Connector: RJ-45<br>Port Standard: RS-232C<br>Baud Rate: 115200 bit/s<br>Services: Connect the CON port to the serial port of a PC and run a terminal emulation program on the PC to configure the device<br>Transmission Medium: Console cable | - |
| 2 USB 3.0ports | Connector: USB Type-A interface<br>Port Standard: USB 3.0 host interface<br>Negotiation Mode:1.1/2.0/3.0 autosensing | - |

## LED

The following table describes the meanings of LED indicators on the front panels of SG-6000-A2815/A2715.

Note:

- The STA LED will remain OFF when there is a boot failure caused by OS software damage. Contact your sales representative if this occurs.

Table: Front Panel LED Descriptions of SG-6000-A2815/A2715

| LED | LED Name | Color/Status | Description |
|---|---|---|---|
| PWR | Power LED | Green/Always on | The device power is running normally. |
| | | Orange/Red/Always on | The device power is running abnormally. |
| | | Off | The device is powered off. |
| STA | Status LED | Green/Blinking | The system is running normally. |
| | | Off | The system has not been booted/is booting/has failed to boot. |
| ALM | Alarm LED | Red/Always on | The system is sending alarm(s). |
| | | Green/Blinking | The system is waiting. |
| | | Off | The system is running normally. |
| | | Orange/Blinking | The system is using a trial license. |
| | | Orange | The trial license has expired and there is no legitimate license installed in the system. |
| PS0 (Single power sup- | Power supply LED | Green/Always on | Power Supply PS0 is running normally. |

| LED | LED Name | Color/Status | Description |
|---|---|---|---|
| ply) | | | |
| | | Off | Power Supply PS0 is powered off or has failed. |
| PS0, PS1 (Dual power supply) | Power supply LED | PS0: Green/Always on PS1: Green/Always on | Power Supply PS0 and PS1 are running normally. |
| | | PS0: Green/Always on, PS1: Red/Always on | Power Supply PS0 is running normally, Power Supply PS1 is powered off or has failed. |
| | | PS0: Red/Always on, PS1: Green/Always on | Power Supply PS0 is powered off or has failed, Power Supply PS1 is running normally. |
| | | PS0: Off, PS1: Off | Power Supply PS0 and PS1 are powered off or have failed. |
| HA | HA LED | Green/Always on | Not using HA. This device is the master device. |
| | | Green/Blinking | Two devices are in an HA cluster. This device is working as the master. |
| | | Orange/Blinking | Two devices are in an HA cluster. This device is working as the slave. |
| | | Red/Blinking | HA function has failed. |
| FAN | FAN LED | Green/Always on | The cooling system is running normally. |

| LED | LED Name | Color/Status | Description |
|---|---|---|---|
| | | Red/Always on | One of the fans has failed or one of the fan trays is not present. |
| SSD | SSD LED | Green/Blinking | SSD is transmitting data. |
| | | Off | SSD is not present or no data is transmitted. |
| LNK | LNK LED | Green/Always on | The link between this port and its peer device is in normal status. |
| | | Off | The link between this port and its peer device has failed or there is no connection. |
| ACT | ACT LED | Orange/Blinking | The port is sending or receiving data. |
| | | Off | No data is transmitted on this port. |

## Buttons

SG-6000-A2815/A2715 device includes two buttons, namely the power button and the CLR button.

### *Power Button*

The power button on the front panel of the SG-6000-A2815/A2715 is used for shutting down and restarting after shutting down.

- Shutdown: Long press the power button for about 5 seconds. When the PWR LED changes from blinking green to red or orange and the blue power button indicator is off, system is shut

down and the power cord can be removed.

- Restart: After being connected to the power supply by the power cord for the first time, the device will automatically start up. If the device is shut down by pressing the power button or using the shutdown command, and the power cord has not been disconnected after shutdown, you can press the power button to power on the device.

### *CLR Button*

The CLR button on the front panel of SG-6000-A2815/A2715 is the pinhole of the front panel and is used to reset the device back to the factory default settings. You can restore access to the device with this button if the login password is lost.

**Note:** Use this button with caution. Resetting the device will clear all existing configurations.

To restore the factory default settings, take the following steps:

1. After powering on the device, when the system is in operation, use a pin to gently press the CLR button in the pinhole.
2. Wait for the CON port to print the message "Clear button is pressed, the machine will power down," and observe that the STA and ALM LEDs both turn to a solid red. Once the STA and ALM LEDs go out, the device will restart, and during the startup process, the CON port will print the message "CLR button pressed."
3. Once the restart is completed, the factory settings will be restored.

## System Parameters

The following table lists the system parameters of SG-6000-A2815/A2715.

Table: System Parameters of SG-6000-A2815/A2715

| Item | Description |
| --- | --- |
| **System Parameters** | |
| Flash Memory | 8GB |
| **Dimensions and Weight** | |
| Height | 1U |
| Dimensions (W×D×H)<br>**Note:**In the data, the width of the device does not include that of rack-mounting ear; the depth of the device does not include that of front and back captive screw and washer; the height of the device does not include that of foot pad. | W440.0mm * D340.0mm * H44.4mm |
| Weight | Net weight: 4.55kg<br>Gross weight:7.5kg (accessories and packages included) |
| **Rated Power Consumption** | |
| Rated Power Consumption | 60W |
| **Environmental Parameters** | |
| Ambient Temperature | 0℃~40℃ |
| Relative Humidity | 10%~95% (non-condensing) |

## Power

SG-6000-A2815/A2715 uses a fixed power supply that is connected to the external power supply via power cables. The fixed power supply cannot be replaced. Various power supply specifications

are available, allowing you to choose between DC/AC single power or AC dual power with 1+1 redundancy as needed.

Dual power supply (1+1 redundancy) : When two power supplies are connected at the same time, the two power supplies work simultaneously. If one power supply fails during operation, the other power supply takes over all the work to prevent losses caused by power failure. The two power supplies are mutually backup.

**Related Topics:**

- For instructions on connecting the power supply module's power cable, refer to "Power Cable" on Page 211.

Table: Power Supplies of SG-6000-A2815/A2715

| Power Supply Specification | Power Supply Type | Input Voltage Range | Maximum Output Power of a Single Power Supply |
|---|---|---|---|
| Single AC (default)<br>Single DC (optional)<br>Dual (1+1 redundancy)<br>AC (optional) | Fixed | AC: 100~240V AC, 50/60Hz and HVDC: 127~373 HVDC<br>DC: -36 ~ -72V DC | 150W |

## SSD

SSD on the device is mainly used for saving logs to the local for device monitoring, behavior auditing, etc.

SG-6000-A2815/A2715 does not come with a hard disk; you can purchase and install hard disks with different storage capacities as needed.

SSD View:

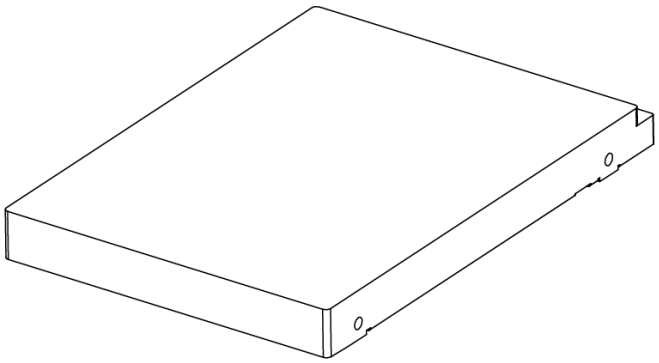

Table: SSD Types and Storage Capacity

| Type | Size | Storage Capacity |
|---|---|---|
| SSD | 2.5 inches | 3.84T/1.92T/960G/480G |

**Related Topics:**

- For instructions on installing the SSD, refer to Installing/Removing/Replacing the SSD .

**Note:**

- The device only supports the original Hillstone SSD. Installing a non-original SSD may cause abnormal running of the device. To purchase an original SSD, contact your sales representative.
- Due to differences in SSD capacity calculation methods, the operating system uses a binary algorithm, calculating 1MB as 1024KB, whereas the manufacturer's nominal capacity calculates 1MB as 1000KB and accounts for file system overhead. Therefore, there may be a discrepancy between the displayed and nominal capacities of the SSD. The capacity that is displayed prevails.

## Cooling System

SG-6000-A2815/A2715 device includes 3 built-in fans that are not removable. The air inlet of the cooling system is located on the front panel. The air that passes through the device will be

discharged from the air outlet on the back panel. To ensure the cooling system works normally, leave adequate space around the device.

Figure: Air Circulation

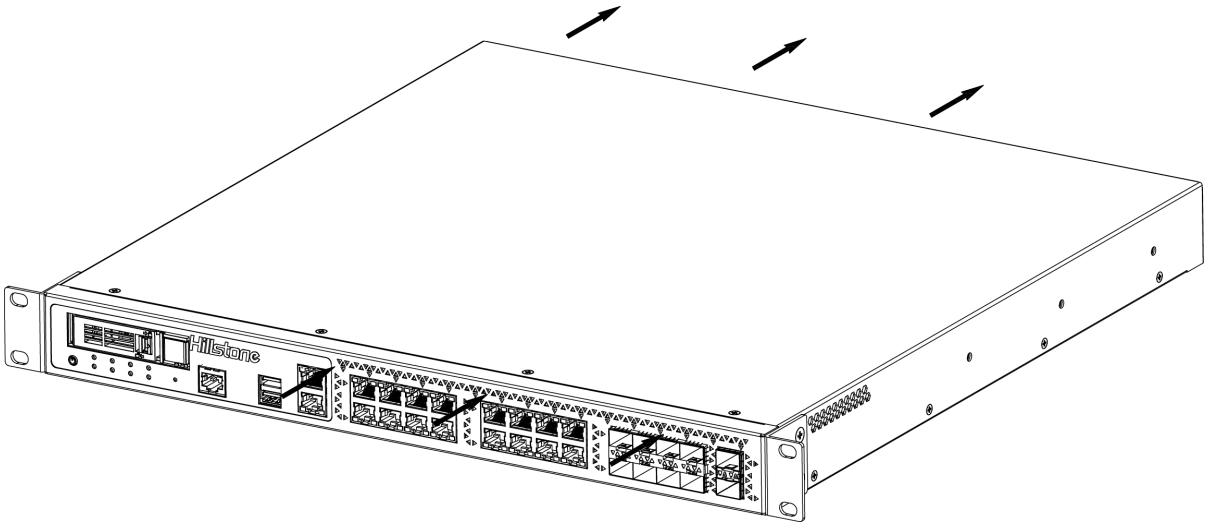

The ambient temperature should be kept between 0 and 40 degrees Celsius. If a fan works abnormally, the FAN LED will turn solid red, and then you should replace the fan/fan tray with a new one.

**Note:** The persistent abnormal fan will cause the system to be unable to dissipate heat in time. If the internal temperature is too high, the system will power off and the current configurations will not be saved.

## Available Expansion Module

The front panel of SG-6000-A2815/A2715 provides a expansion slot. The following table lists the supported expansion modules and the compatible transceiver modules. To use a supported expansion module, install the module into the device's expansion slot.

**Related Topics:**

- For a detailed introduction to the expansion module, refer to "Expansion Modules" on Page 224.

- For instructions on how to install and remove expansion modules, refer to "Installing and Removing the Expansion Module" on Page 326.

| Available Types of Expansion Modules | Expansion Module Models | Compatible Transceiver Modules |
|---|---|---|
| Interface module | IOC-A-F-4SFP+(Without Bypass)<br>IOC-A-F-8SFP+(Without Bypass) | "10GE(SFP+) Transceiver Modules" on Page 254<br>Use the "1GE(SFP) Transceiver Module" on Page 243/"Copper SFP Module" on Page 252 after speed reduction. |
| | IOC-A-F-8GE(four pairs of Bypass) | - |

# SG-6000-A2800/A2700

SG-6000-A2800/A2700 device is designed to fit in standard 19-inch cabinets/racks. The mounting rail assemblies are included with the device, They can not only be installed in a standard 19-inch cabinet/rack with a tray or mounting rail assemblies, but also be placed on a workbench.

- Front Panel
- Back Panel
- Ports
- LED
- Buttons
- System Parameters
- Power
- SSD
- Cooling System

## Front Panel

The front panel of SG-6000-A2800/A2700 consists of 1 power button, 1 SSD expansion slot, 1 CLR button, 2 USB3.0 ports, 1 Console port, 1 MGT port, ports 0-7 are GE RJ45 ports, ports 8-15 are GE SFP ports, ports 16-17 are GE SFP ports, 1 Power LED, 1 Status LED, 1 Alarm LED, 2 Power supply LED (devices with dual power supplies have 2 power supply LED PS0 and PS1, while devices with single power supply only have 1 power supply LED PS0), 1 SSD LED, and 1 Fan LED, and several air inlets.

Figure: SG-6000-A2800 (dual power supplies) /A2700 (dual power supplies) Front Panel

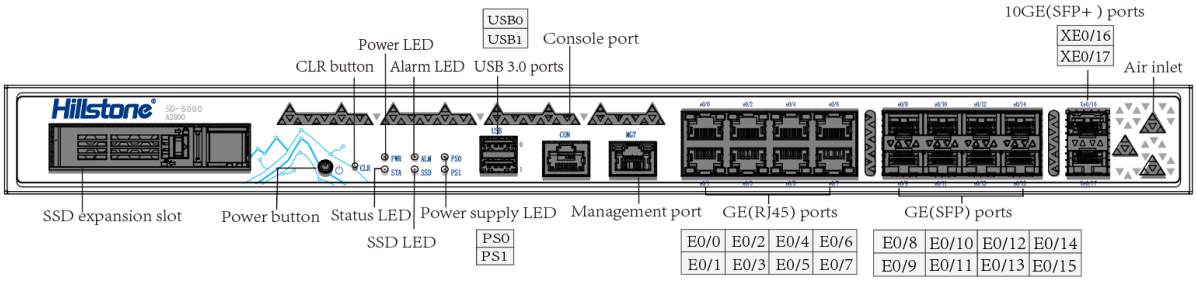


**Related Topics:**

- For instructions of ports, refer to Ports.
- For instructions of LED Indicators on the front panel, refer to LED.
- For information on how to use the power button and CLR button on the front panel, refer to Buttons.

## Back Panel

The back panel of SG-6000-A2800/A2700 consists of 2 power sockets (devices with dual power supplies have 2 power sockets, while devices with single power supply only have 1 power socket), 2 built-in fans, and 1 grounding screw.

Figure: SG-6000-A2800 (dual power supplies) /A2700 (dual power supplies) Back Panel

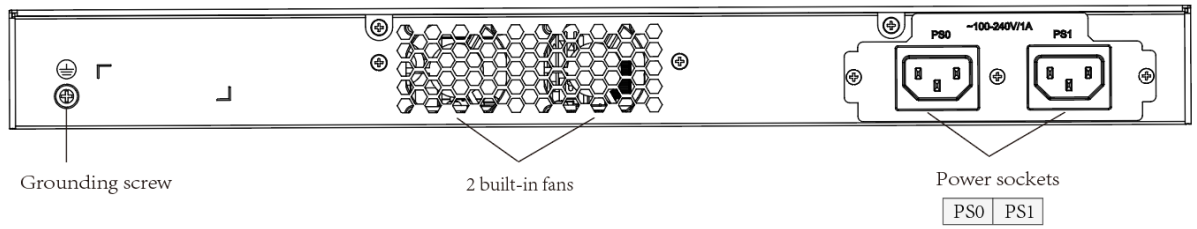

## Ports

Note:

- The original Hillstone optical module should not be used together with optical modules from other manufacturers, otherwise some errors may occur.
- Before you use the transceiver module, we strongly recommend that you upgrade the device system to a specified version based on the SN format of the transceiver module. This way, you can prevent the transceiver module from being affected by version incompatibility. See Supported Versions for Transceiver Module.
- To avoid dust falling into the port socket, you should place a rubber dust cap (originally in the accessory box) over the port.

### *Fixed Ports*

Explanation of Corresponding Relationships for Fixed Ports of SG-6000-A2800/A2700.

Table: Explanation of Corresponding Relationships for Fixed Ports of SG-6000-A2800/A2700

| Port Type/Number | Port Attributes | Compatible Transceiver Modules |
|---|---|---|
| eight GE(RJ45) ports | Connector: RJ-45<br>Port Standard: Auto-MDI/MDIX (crossover cable and straight-through cable autosensing)<br>Frame Format: Ethernet_II/Ethernet_SNAP<br>Negotiation Mode: 10/100/1000Mbps autosensing, Full/half-duplex | - |

| Port Type/Number | Port Attributes | Compatible Transceiver Modules |
| --- | --- | --- |
| 8 GE(SFP) ports | Connector: SFP<br>Frame Format: Ethernet_II/Ethernet_SNAP<br>Negotiation Mode:<br>• SFP optical module: 1000Mbps<br>• SFP copper module: 1000Mbps ,Full-duplex | "1GE(SFP) Transceiver Module" on Page 243/"Copper SFP Module" on Page 252 |
| 2个10GE SFP+ports | Connector: SFP+<br>Frame Format: Ethernet_II/Ethernet_SNAP<br>Negotiation Mode:<br>• SFP+ optical module: 10Gbps<br>• SFP optical module: 1000Mbps<br>• SFP copper module: 1000Mbps, Full-duplex | "10GE(SFP+) Transceiver Modules" on Page 254<br>Use the "1GE(SFP) Transceiver Module" on Page 243/"Copper SFP Module" on Page 252 after speed reduction. |

### *Management Ports*

The management port description of the SG-6000-A2800/A2700 device is shown in the table below.

Table: Explanation of Corresponding Relationships for Management Ports of SG-6000-A2800/A2700

| Port Type/Number | Port Attributes | Compatible Transceiver Modules |
| --- | --- | --- |
| 1 MGT port | - | - |
| 1 Console port | The device provides an RS-232C asynchronous serial console port for you to configure the device.<br>Connector: RJ-45<br>Port Standard: RS-232C<br>Baud Rate: 115200 bit/s<br>Services: Connect the CON port to the serial port of a PC and run a terminal emulation program on the PC to configure the device<br>Transmission Medium: Console cable | - |
| 2 USB 3.0ports | Connector: USB Type-A interface<br>Port Standard: USB 3.0 host interface<br>Negotiation Mode:1.1/2.0/3.0 auto-sensing | - |

## LED

The following table describes the meanings of LED indicators on the front panels of SG-6000-A2800/A2700.

Note:

- The STA LED will remain OFF when there is a boot failure caused by OS software damage. Contact your sales representative if this occurs.
- For a port with a bandwidth of 10G, a blinking or solid ACT LED indicates that the port is sending or receiving data.

Table: Front Panel LED Descriptions of SG-6000-A2800/A2700

| LED | LED Name | Color/Status | Description |
|---|---|---|---|
| PWR | Power LED | Green/Always on | The device power is running normally. |
| | | Orange/Red/Always on | The device power is running abnormally. |
| | | Off | The device is powered off. |
| STA | Status LED | Green/Blinking | The system is running normally. |
| | | Off | The system has not been booted/is booting/has failed to boot. |

| LED | LED Name | Color/Status | Description |
|---|---|---|---|
| ALM | Alarm LED | Red/Always on | The system is sending alarm(s). |
| | | Green/Blinking | The system is waiting. |
| | | Off | The system is running normally. |
| | | Orange/Blinking | The system is using a trial license. |
| | | Orange | The trial license has expired and there is no legitimate license installed in the system. |
| PS0(Single power supply) | Power supply LED | Green/Always on | Power Supply PS0 is running normally. |
| | | Off | Power Supply PS0 is powered off or has failed. |
| PS0, PS1 (Dual power supply) | Power supply LED | PS0: Green/Always on PS1: Green/Always on | Power Supply PS0 and PS1 are running normally. |
| | | PS0: Green/Always on, PS1: Red/Always on | Power Supply PS0 is running normally, Power Supply PS1 is powered off or has failed. |
| | | PS0: Red/Always on, PS1: Green/Always on | Power Supply PS0 is powered off or has failed, Power Supply PS1 is running normally. |
| | | PS0: Off, PS1: Off | Power Supply PS0 and PS1 are powered off or have failed. |
| HA | HA LED | Green/Always on | Not using HA. This device is the |

| LED | LED Name | Color/Status | Description |
|---|---|---|---|
| | | | master device. |
| | | Green/Blinking | Two devices are in an HA cluster. This device is working as the master. |
| | | Orange/Blinking | Two devices are in an HA cluster. This device is working as the slave. |
| | | Red/Blinking | HA function has failed. |
| FAN | FAN LED | Green/Always on | The cooling system is running normally. |
| | | Red/Always on | One of the fans has failed or one of the fan trays is not present. |
| SSD | SSD LED | Green/Blinking | SSD is transmitting data. |
| | | Off | SSD is not present or no data is transmitted. |
| LNK | LNK LED | Green/Always on | The link between this port and its peer device is in normal status. |
| | | Off | The link between this port and its peer device has failed or there is no connection. |
| ACT | ACT LED | Orange/Blinking | The port is sending or receiving data. |
| | | Off | No data is transmitted on this port. |

## Buttons

SG-6000-A2800/A2700 device includes two buttons, namely the power button and the CLR button.

### *Power Button*

The power button on the front panel of the SG-6000-A2800/A2700 is used for shutting down and restarting after shutting down.

- Shutdown: Long press the power button for about 5 seconds. When the PWR LED changes from blinking green to red or orange and the blue power button indicator is off, system is shut down and the power cord can be removed.
- Restart: After being connected to the power supply by the power cord for the first time, the device will automatically start up. If the device is shut down by pressing the power button or using the shutdown command, and the power cord has not been disconnected after shutdown, you can press the power button to power on the device.

### *CLR Button*

The CLR button on the front panel of SG-6000-A2800/A2700 is the pinhole of the front panel and is used to reset the device back to the factory default settings. You can restore access to the device with this button if the login password is lost.

> **Note:** Use this button with caution. Resetting the device will clear all existing configurations.

To restore the factory default settings, take the following steps:

1. After powering on the device, when the system is in operation, use a pin to gently press the CLR button in the pinhole.
2. Wait for the CON port to print the message "Clear button is pressed, the machine will power down," and observe that the STA and ALM LEDs both turn to a solid red. Once the STA

and ALM LEDs go out, the device will restart, and during the startup process, the CON port will print the message "CLR button pressed."

3. Once the restart is completed, the factory settings will be restored.

## System Parameters

The following table lists the system parameters of SG-6000-A2800/A2700.

Table: System Parameters of SG-6000-A2800/A2700

| Item | Description |
|---|---|
| **System Parameters** | |
| Flash Memory | 8GB |
| **Dimensions and Weight** | |
| Height | 1U |
| Dimensions (W × D × H)<br>**Note:**In the data, the width of the device does not include that of rack-mounting ear; the depth of the device does not include that of front and back captive screw and washer; the height of the device does not include that of foot pad. | W436.0mm * D320.0mm * H44.0mm |
| Weight | Net weight: 4.1kg<br>Gross weight:7.7kg (accessories and packages included) |
| **Rated Power Consumption** | |

| Item | Description |
|---|---|
| Rated Power Consumption | 50W |
| **Environmental Parameters** | |
| Ambient Temperature | 0℃~40℃ |
| Relative Humidity | 10%~95% (non-condensing) |

## Power

SG-6000-A2800/A2700 uses a fixed power supply that is connected to the external power supply via power cables. The fixed power supply cannot be replaced. Various power supply specifications are available, allowing you to choose between DC/AC single power or AC dual power with 1+1 redundancy as needed.

Dual power supply (1+1 redundancy) : When two power supplies are connected at the same time, the two power supplies work simultaneously. If one power supply fails during operation, the other power supply takes over all the work to prevent losses caused by power failure. The two power supplies are mutually backup.

**Related Topics:**

- For instructions on connecting the power supply module's power cable, refer to "Power Cable" on Page 211.

Table: Power Supplies of SG-6000-A2800/A2700

| Power Supply Specification | Power Supply Type | Input Voltage Range | Maximum Output Power of a Single Power Supply |
|---|---|---|---|
| Single AC (default)<br>Single DC (optional)<br>Dual (1+1 redundancy)<br>AC (optional) | Fixed | AC: 100~240V AC, 50/60Hz and HVDC: 127~373 HVDC<br>DC: -36 ~ -72V DC | 60W |

## SSD

SSD on the device is mainly used for saving logs to the local for device monitoring, behavior auditing, etc.

SG-6000-A2800/A2700 does not come with a hard disk; you can purchase and install hard disks with different storage capacities as needed.

SSD View:

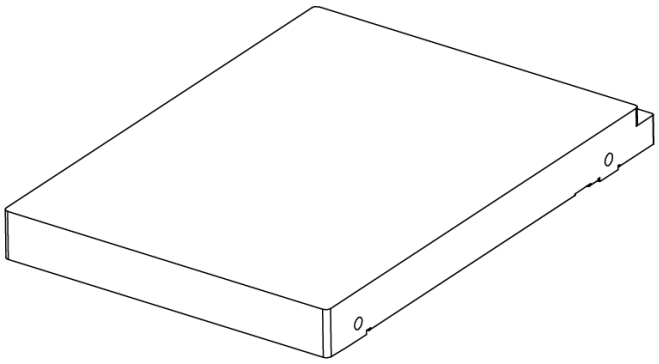

Table: SSD Types and Storage Capacity

| Type | Size | Storage Capacity |
|---|---|---|
| SSD | 2.5 inches | 3.84T/1.92T/960G/480G |

**Related Topics:**

- For instructions on installing the SSD, refer to Installing/Removing/Replacing the SSD .

**Note:**

- The device only supports the original Hillstone SSD. Installing a non-original SSD may cause abnormal running of the device. To purchase an original SSD, contact your sales representative.
- Due to differences in SSD capacity calculation methods, the operating system uses a binary algorithm, calculating 1MB as 1024KB, whereas the manufacturer’ s nominal

capacity calculates 1MB as 1000KB and accounts for file system overhead. Therefore, there may be a discrepancy between the displayed and nominal capacities of the SSD. The capacity that is displayed prevails.

## Cooling System

SG-6000-A2800/A2700 device includes 2 built-in fans that are not removable. The air inlet of the cooling system is located on the front panel. The air that passes through the device will be discharged from the air outlet on the back panel. To ensure the cooling system works normally, leave adequate space around the device.

Figure: Air Circulation

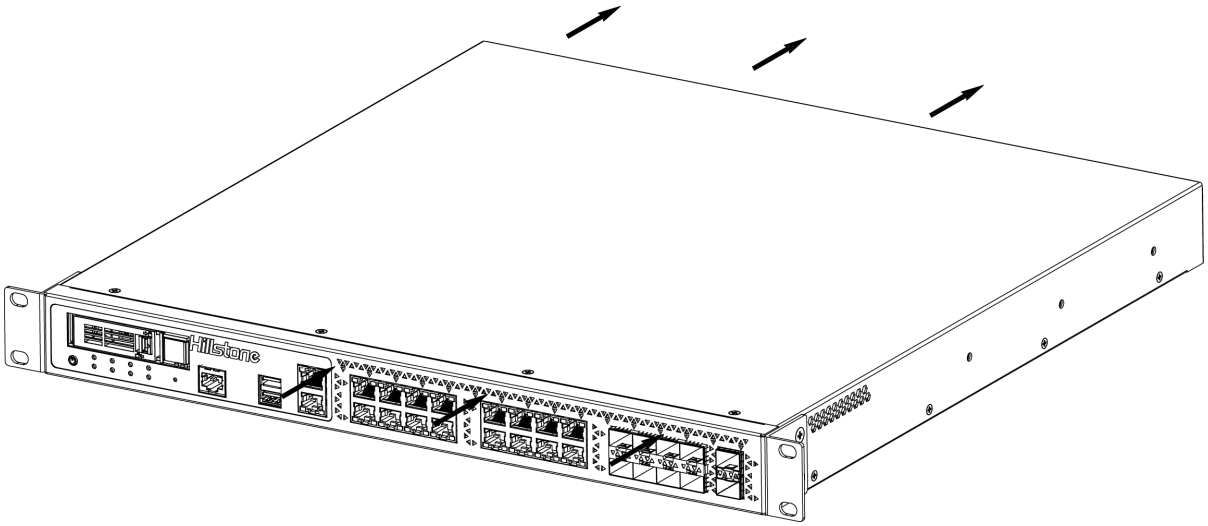

The ambient temperature should be kept between 0 and 40 degrees Celsius. If a fan works abnormally, the FAN LED will turn solid red, and then you should replace the fan/fan tray with a new one.

**Note:** The persistent abnormal fan will cause the system to be unable to dissipate heat in time. If the internal temperature is too high, the system will power off and the current configurations will not be saved.

# SG-6000-A2600/A2000

SG-6000-A2600/A2000 device is designed to fit in standard 19-inch cabinets/racks. The mounting rail assemblies are included with the device, They can not only be installed in a standard 19-inch cabinet/rack with a tray or mounting rail assemblies, but also be placed on a workbench.

- Front Panel
- Back Panel
- Ports
- LED
- Buttons
- System Parameters
- Power
- SSD
- Cooling System

## Front Panel

The front panel of SG-6000-A2600/A2000 consists of 1 power button, 1 SSD expansion slot, 1 CLR button, 2 USB3.0 ports, 1 Console port, 1 MGT port, ports 0-7 are GE RJ45 ports ( ports 6/7 are bypassed to each other), several LED indicators 1 Power LED, 1 Status LED, 1 Alarm LED, 1 SSD LED, and 2 Power supply LED (devices with dual power supplies have 2 power supply LED PS0 and PS1, while devices with single power supply only have 1 power supply LED PS0), and several air inlets.

Figure: SG-6000-A2600 (dual power supplies) /A2000 (dual power supplies) Front Panel

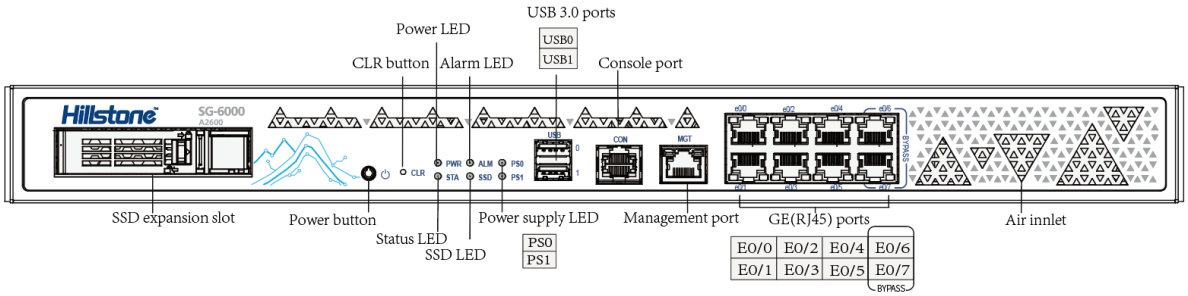


**Related Topics:**

- For instructions of ports, refer to Ports.
- For instructions of LED Indicators on the front panel, refer to LED.
- For information on how to use the power button and CLR button on the front panel, refer to Buttons.

## Back Panel

The back panel of SG-6000-A2600/A2000 consists of 2 power sockets (devices with dual power supplies have 2 power sockets, while devices with single power supply only have 1 power socket), 4 built-in fans, and 1 grounding screw.

Figure: SG-6000-A2600 (dual power supplies) /A2000 (dual power supplies) Back Panel

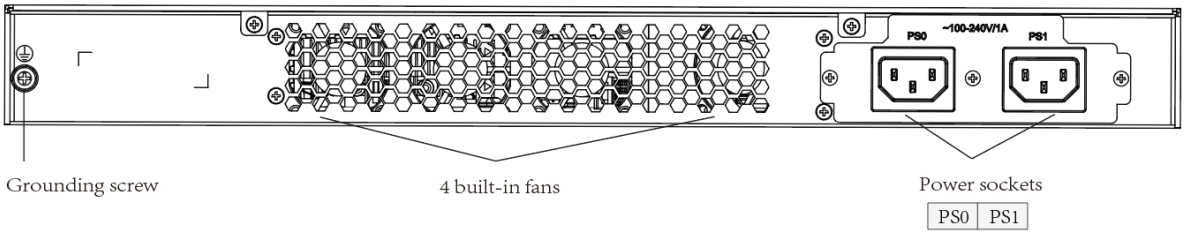

## Ports

Note:

- To avoid dust falling into the port socket, you should place a rubber dust cap (originally in the accessory box) over the port.

### *Fixed Ports*

Explanation of Corresponding Relationships for Fixed Ports of SG-6000-A2600/A2000.

Table: Explanation of Corresponding Relationships for Fixed Ports of SG-6000-A2600/A2000

| Port Type/Number | Port Attributes | Compatible Transceiver Modules |
|---|---|---|
| eight GE(RJ45) ports (1 pair of bypass) | Connector: RJ-45<br>Port Standard: Auto-MDI/MDIX (crossover cable and straight-through cable autosensing)<br>Frame Format: Ethernet_II/Ethernet_SNAP<br>Negotiation Mode: 10/100/1000Mbps autosensing, Full/half-duplex | - |

### *Management Ports*

The management port description of the SG-6000-A2600/A2000 device is shown in the table below.

Table: Explanation of Corresponding Relationships for Management Ports of SG-6000-A2600/A2000

| Port Type/Number | Port Attributes | Compatible Transceiver Modules |
|---|---|---|
| 1 MGT port | - | - |
| 1 Console port | The device provides an RS-232C asynchronous serial console port for you to configure the device.<br>Connector: RJ-45<br>Port Standard: RS-232C<br>Baud Rate: 115200 bit/s<br>Services: Connect the CON port to the serial port of a PC and run a terminal emulation program on the PC to configure the device<br>Transmission Medium: Console cable | - |
| 2 USB 3.0ports | Connector: USB Type-A interface<br>Port Standard: USB 3.0 host interface<br>Negotiation Mode:1.1/2.0/3.0 autosensing | - |

## LED

The following table describes the meanings of LED indicators on the front panels of SG-6000-A2600/A2000.

Note:

- The STA LED will remain OFF when there is a boot failure caused by OS software damage. Contact your sales representative if this occurs.

Table: Front Panel LED Descriptions of SG-6000-A2600/A2000

| LED | LED Name | Color/Status | Description |
|---|---|---|---|
| PWR | Power LED | Green/Always on | The device power is running normally. |
| | | Orange/Red/Always on | The device power is running abnormally. |
| | | Off | The device is powered off. |
| STA | Status LED | Green/Blinking | The system is running normally. |
| | | Off | The system has not been booted/is booting/has failed to boot. |
| ALM | Alarm LED | Red/Always on | The system is sending alarm(s). |
| | | Green/Blinking | The system is waiting. |
| | | Off | The system is running normally. |
| | | Orange/Blinking | The system is using a trial license. |
| | | Orange | The trial license has expired and there is no legitimate license installed in the system. |
| PS0(Single power sup- | Power supply LED | Green/Always on | Power Supply PS0 is running normally. |

| LED | LED Name | Color/Status | Description |
|---|---|---|---|
| ply) | | | |
| | | Off | Power Supply PS0 is powered off or has failed. |
| PS0, PS1 (Dual power supply) | Power supply LED | PS0: Green/Always on PS1: Green/Always on | Power Supply PS0 and PS1 are running normally. |
| | | PS0: Green/Always on, PS1: Red/Always on | Power Supply PS0 is running normally, Power Supply PS1 is powered off or has failed. |
| | | PS0: Red/Always on, PS1: Green/Always on | Power Supply PS0 is powered off or has failed, Power Supply PS1 is running normally. |
| | | PS0: Off, PS1: Off | Power Supply PS0 and PS1 are powered off or have failed. |
| HA | HA LED | Green/Always on | Not using HA. This device is the master device. |
| | | Green/Blinking | Two devices are in an HA cluster. This device is working as the master. |
| | | Orange/Blinking | Two devices are in an HA cluster. This device is working as the slave. |
| | | Red/Blinking | HA function has failed. |
| FAN | FAN LED | Green/Always on | The cooling system is running normally. |

| LED | LED Name | Color/Status | Description |
|---|---|---|---|
| | | Red/Always on | One of the fans has failed or one of the fan trays is not present. |
| SSD | SSD LED | Green/Blinking | SSD is transmitting data. |
| | | Off | SSD is not present or no data is transmitted. |
| LNK | LNK LED | Green/Always on | The link between this port and its peer device is in normal status. |
| | | Off | The link between this port and its peer device has failed or there is no connection. |
| ACT | ACT LED | Orange/Always on | The link between this port and its peer device is in normal status |
| | | Orange/Blinking | The port is sending or receiving data. |
| | | Off | The link between this port and its peer device is abnormal or there is no connection. |

## Buttons

SG-6000-A2600/A2000 device includes two buttons, namely the power button and the CLR button.

### *Power Button*

The power button on the front panel of the SG-6000-A2600/A2000 is used for shutting down and restarting after shutting down.

- Shutdown: Long press the power button for about 5 seconds. When the PWR LED changes from blinking green to red or orange and the blue power button indicator is off, system is shut down and the power cord can be removed.
- Restart: After being connected to the power supply by the power cord for the first time, the device will automatically start up. If the device is shut down by pressing the power button or using the shutdown command, and the power cord has not been disconnected after shutdown, you can press the power button to power on the device.

### *CLR Button*

The CLR button on the front panel of SG-6000-A2600/A2000 is the pinhole of the front panel and is used to reset the device back to the factory default settings. You can restore access to the device with this button if the login password is lost.

> **Note:** Use this button with caution. Resetting the device will clear all existing configurations.

To restore the factory default settings, take the following steps:

1. After powering on the device, when the system is in operation, use a pin to gently press the CLR button in the pinhole.
2. Wait for the CON port to print the message "Clear button is pressed, the machine will power down," and observe that the STA and ALM LEDs both turn to a solid red. Once the STA and ALM LEDs go out, the device will restart, and during the startup process, the CON port will print the message "CLR button pressed."
3. Once the restart is completed, the factory settings will be restored.

## System Parameters

The following table lists the system parameters of SG-6000-A2600/A2000:

Table: System Parameters of SG-6000-A2600/A2000

| Item | Description |
|---|---|
| **System Parameters** | |
| Flash Memory | 8GB |
| **Dimensions and Weight** | |
| Height | 1U |
| Dimensions (W × D × H)<br>**Note:**In the data, the width of the device does not include that of rack-mounting ear; the depth of the device does not include that of front and back captive screw and washer; the height of the device does not include that of foot pad. | W436.0mm * D320.0mm * H44.0mm |
| Weight | Net weight: 3.9kg<br>Gross weight:6.5kg (accessories and packages included) |
| **Rated Power Consumption** | |
| Rated Power Consumption | 50W |
| **Environmental Parameters** | |
| Ambient Temperature | 0℃~40℃ |
| Relative Humidity | 10%~95% (non-condensing) |

## Power

SG-6000-A2600/A2000 uses a fixed power supply that is connected to the external power supply via power cables. The fixed power supply cannot be replaced. Various power supply specifications are available, allowing you to choose between DC/AC single power or AC dual power with 1+1 redundancy as needed.

Dual power supply (1+1 redundancy) : When two power supplies are connected at the same time, the two power supplies work simultaneously. If one power supply fails during operation, the other power supply takes over all the work to prevent losses caused by power failure. The two power supplies are mutually backup.

**Related Topics:**

- For instructions on connecting the power supply module's power cable, refer to "Power Cable" on Page 211.

Table: Power Supplies of SG-6000-A2600/A2000

| Power Supply Specification | Power Supply Type | Input Voltage Range | Maximum Output Power of a Single Power Supply |
|---|---|---|---|
| Single AC (default)<br>Single DC (optional)<br>Dual (1+1 redundancy)<br>AC (optional) | Fixed | 100~240V AC, 50/60Hz<br>DC: -36 ~ -72V DC | 60W |

## SSD

SSD on the device is mainly used for saving logs to the local for device monitoring, behavior auditing, etc.

SG-6000-A2600/A2000 does not come with a hard disk; you can purchase and install hard disks with different storage capacities as needed.

SSD View:

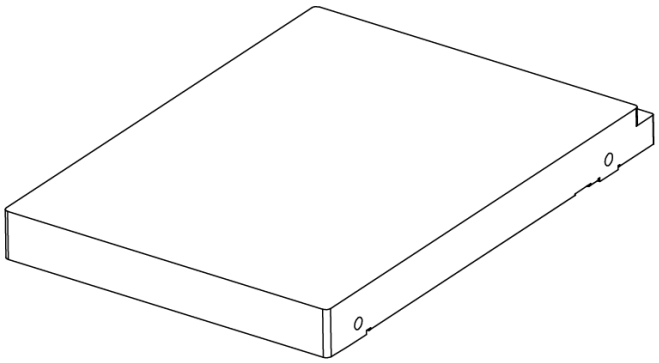

Table: SSD Types and Storage Capacity

| Type | Size | Storage Capacity |
|---|---|---|
| SSD | 2.5 inches | 3.84T/1.92T/960G/480G |

**Related Topics:**

- For instructions on installing the SSD, refer to Installing/Removing/Replacing the SSD .

**Note:**

- The device only supports the original Hillstone SSD. Installing a non-original SSD may cause abnormal running of the device. To purchase an original SSD, contact your sales representative.
- Due to differences in SSD capacity calculation methods, the operating system uses a binary algorithm, calculating 1MB as 1024KB, whereas the manufacturer's nominal capacity calculates 1MB as 1000KB and accounts for file system overhead. Therefore, there may be a discrepancy between the displayed and nominal capacities of the SSD. The capacity that is displayed prevails.

## Cooling System

SG-6000-A2600/A2000 device includes 4 built-in fans that are not removable. The air inlet of the cooling system is located on the front panel. The air that passes through the device will be

discharged from the air outlet on the back panel. To ensure the cooling system works normally, leave adequate space around the device.

Figure: Air Circulation

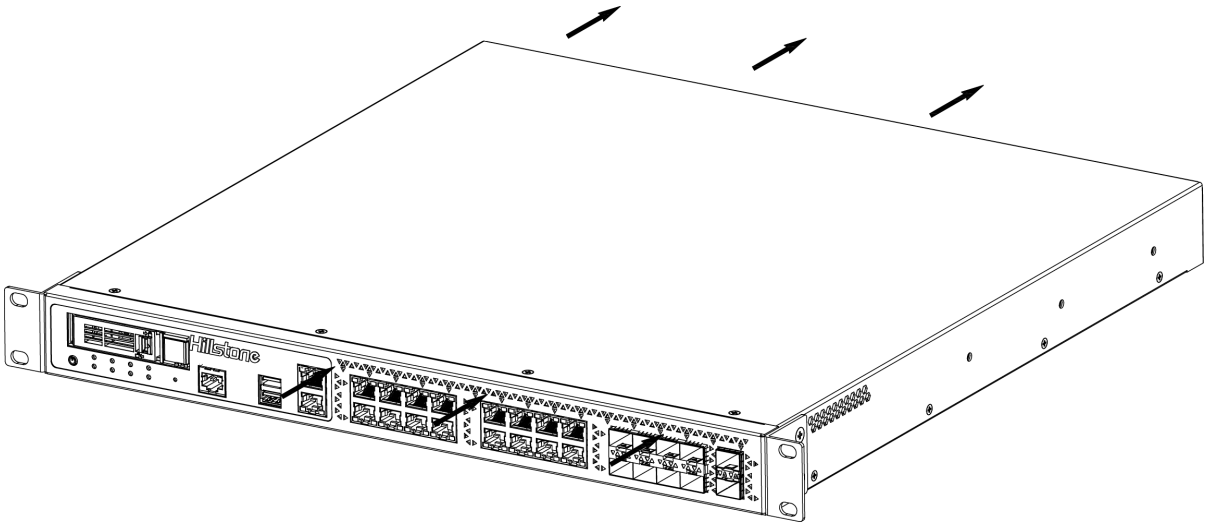

The ambient temperature should be kept between 0 and 40 degrees Celsius. If a fan works abnormally, the FAN LED will turn solid red, and then you should replace the fan/fan tray with a new one.

**Note:** The persistent abnormal fan will cause the system to be unable to dissipate heat in time. If the internal temperature is too high, the system will power off and the current configurations will not be saved.

# SG-6000-A1605-A

SG-6000-A1605-A device is designed to fit in standard 19-inch cabinets/racks. The rack-mounting ears are included with the device. They can not only be installed in a standard 19-inch cabinet/rack with rack-mounting ears, but also be placed on a workbench.


- Front Panel
- Back Panel
- Ports
- LED
- System Parameters
- Power
- SSD
- Cooling System


## Front Panel

The front panel of SG-6000-A1605-A consists of 1 Console port, 2 USB3.0 ports, 1 MGT0 port, ports 0-8 are GE RJ45 ports, ports 9-10 are Combo ports, several LED indicators (1 Power LED, 1 Status LED, 1 Power supply LED, 1 Alarm LED, 1 HA LED, 1 SSD LED, and 2 SFP LED).

Figure: SG-6000-A1605-A Front Panel

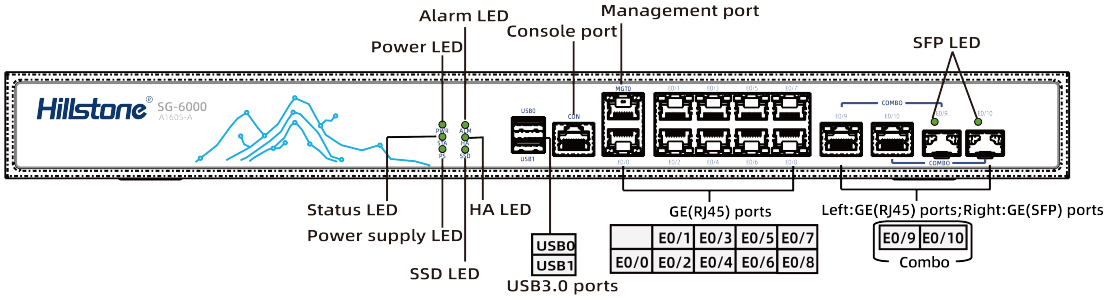

Related Topics:

- For instructions of ports, refer to Ports.
- For instructions of LED Indicators on the front panel, refer to LED.

## Back Panel

The back panel of SG-6000-A1605-A consists of 1 or 2 power sockets (devices with dual power supplies have 2 power sockets, while devices with single power supply only have 1 power socket), 1 built-in fan and 1 grounding screw.

Figure: SG-6000-A1605-A (single power supply) Back Panel

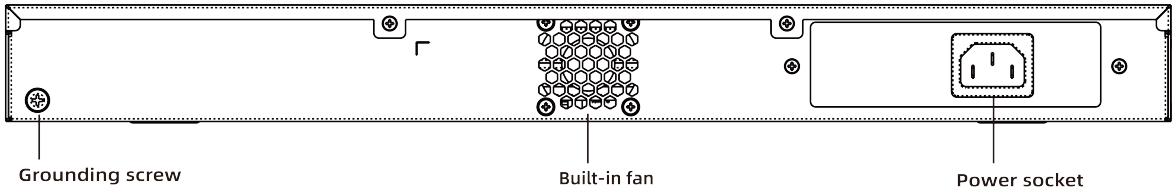


Figure: SG-6000-A1605-A (dual power supplies) Back Panel

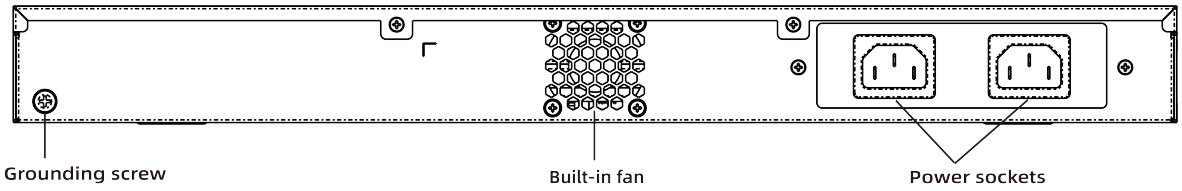


## Ports

Note:

- The original Hillstone optical module should not be used together with optical modules from other manufacturers, otherwise some errors may occur.
- Before you use the transceiver module, we strongly recommend that you upgrade the device system to a specified version based on the SN format of the transceiver mod-

ule. This way, you can prevent the transceiver module from being affected by version incompatibility. See Supported Versions for Transceiver Module.

- To avoid dust falling into the port socket, you should place a rubber dust cap (originally in the accessory box) over the port.

### *Fixed Ports*

Explanation of Corresponding Relationships for Fixed Ports of SG-6000-A1605-A.

Table: Explanation of Corresponding Relationships for Fixed Ports ofSG-6000-A1605-A

| Port Type/Number | Port Attributes | Compatible Transceiver Modules |
|---|---|---|
| 9 GE(RJ45) ports | Connector: RJ-45<br>Port Standard: Auto-MDI/MDIX (crossover cable and straight-through cable autosensing)<br>Frame Format: Ethernet_II/Ethernet_SNAP<br>Negotiation Mode: 10/100/1000Mbps autosensing, Full/half-duplex | - |
| 2 Combo ports | The Combo port, also known as the photoelectric multiplexing port, can be used as a cooper port or a SFP port. But only one type of port can be used at a time. | "1GE(SFP) Transceiver Module" on Page 243/"Copper SFP Module" on Page 252 |

### *Management Ports*

The management port description of the SG-6000-A1605-A device is shown in the table below.

Table: Explanation of Corresponding Relationships for Management Ports of SG-6000-A1605-A

| Port Type/Number | Port Attributes | Compatible Transceiver Modules |
|---|---|---|
| 1 MGT0 port | - | - |
| 1 Console port | The device provides an RS-232C asynchronous serial console port for you to configure the device.<br>Connector: RJ-45<br>Port Standard: RS-232C<br>Baud Rate: 115200 bit/s<br>Services: Connect the CON port to the serial port of a PC and run a terminal emulation program on the PC to configure the device<br>Transmission Medium: Console cable | - |
| 2 USB 3.0 ports | Connector: USB Type-A interface<br>Port Standard: USB 3.0 host interface<br>Negotiation Mode:1.1/2.0/3.0 auto-sensing | - |

**Note:** The MTU setting for the peer device of MGT0 port does not exceed 1500.

## LED

The following table describes the meanings of LED indicators on the front panels of SG-6000-A1605-A.

**Note:** The STA LED will remain OFF when there is a boot failure caused by OS software damage. Contact your sales representative if this occurs.

Table: Front Panel LED Descriptions

| LED | LED Name | Color/Status | Description |
|---|---|---|---|
| PWR | Power LED | Green/Always on | The device power is running normally. |
| | | Off | The device is powered off. |
| STA | Status LED | Green/Blinking | The system is running normally. |
| | | Off | The system has not been booted/is booting/has failed to boot. |

| LED | LED Name | Color/Status | Description |
|---|---|---|---|
| ALM | Alarm LED | Red/Always on | The system is sending alarm(s). |
| | | Orange/Blinking | Install the trial license 15 minutes later, the system is using a trial license. |
| | | Off | The system is running normally. |
| | | Red/Blinking | The trial license has expired and there is no legitimate license installed in the system. |
| PS | Power supply LED | Green/Always on | Dual power supplies are running normally. |
| | | Off | Single power supply is running normally or dual power supplies are powered off. |
| HA | HA LED | Green/Always on | Not using HA. This device is the master device. |
| | | Green/Blinking | Two devices are in an HA cluster. This device is working as the master. |
| | | Orange/Blinking | Two devices are in an HA cluster. This device is working as the slave. |
| | | Red/Blinking | HA function has failed. |

| LED | LED Name | Color/Status | Description |
|---|---|---|---|
| SSD | SSD LED | Green/Blinking | SSD is transmitting data. |
| | | Off | SSD is not present or no data is transmitted. |
| SFP | SFP LED | Green/Always on | The connection between this port and its peer device is normal via a network cable or fiber optic cable. |
| | | Green/Blinking | The port is sending or receiving data. |
| | | Off | The link between this port and its peer device has failed or there is no connection. |
| LINK/ACT | GE(RJ45) left LED | Green/Blinking | The port is sending or receiving data. |
| | | Green/Always on | No data is transmitted on this port. |
| | | Off | The link between this port and its peer device has failed or there is no connection. |
| SPEED | GE(RJ45) right LED | Green/Always on | Link speed is 1000Mbps. |
| | | Orange/Always on | Link speed is 100Mbps. |
| | | Off | Link speed is 10Mbps. |

## System Parameters

The following table lists the system parameters of SG-6000-A1605-A:

Table: System Parameters of SG-6000-A1605-A

| Item | Description |
| --- | --- |
| **System Parameters** | |
| Flash Memory | 8GB |
| **Dimensions and Weight** | |
| Height | 1U |
| Dimensions (W×D×H)<br>**Note:**In the data, the width of the device does not include that of rack-mounting ear; the depth of the device does not include that of front and back captive screw and washer; the height of the device does not include that of foot pad. | W440.0 mm * D263.0 mm * H44.0mm |
| SG-6000-A1605-A(Single AC) Weight | Net weight: 3.02kg<br>Gross weight: 4.78kg (accessories and packages included) |
| SG-6000-A1605-A(Dual AC) Weight | Net weight: 3.14kg<br>Gross weight: 5.07kg (accessories and packages included) |
| SG-6000-A1605-A(Single AC, with SSD) Weight | Net weight: 3.14kg<br>Gross weight: 4.93kg (accessories and packages |

| Item | Description |
| --- | --- |
| | included) |
| SG-6000-A1605-A(Dual AC, with SSD) Weight | Net weight: 3.30kg<br>Gross weight: 5.30kg (accessories and packages included) |
| **Rated Power Consumption** | |
| Rated Power Consumption | 25W |
| **Environmental Parameters** | |
| Ambient Temperature | 0℃~45℃ |
| Relative Humidity | 5%~90% (non-condensing) |

## Power

SG-6000-A1605-A uses a fixed power supply that is connected to the external power supply via power cables. The fixed power supply cannot be replaced. Various power supply specifications are available, allowing you to choose between AC single power or AC dual power with 1+1 redundancy as needed.

Dual power supply (1+1 redundancy) : When two power supplies are connected at the same time, the two power supplies work simultaneously. If one power supply fails during operation, the other power supply takes over all the work to prevent losses caused by power failure. The two power supplies are mutually backup.

**Related Topics:**

- For instructions on connecting the power supply module's power cable, refer to "Power Cable" on Page 211.

Table: Power Supplies of SG-6000-A1605-A

| Power Supply Specification | Power Supply Type | Input Voltage Range |
|---|---|---|
| Single AC (default)<br>Dual (1+1 redundancy) AC (optional) | Fixed | 100~240V AC, 50/60Hz |

## SSD

SSD on the device is mainly used for saving logs to the local for device monitoring, behavior auditing, etc.

SG-6000-A1605-A can be configured with or without a hard disk at the factory, you can select a hard disk with 960G storage capacity as needed. Self removal or installation is not supported. If not selected, the device will ship without a hard disk.

## Cooling System

SG-6000-A1605-A device includes 1 built-in fan that is not removable. The air inlet of the cooling system is located on both sides of the device. The air that passes through the device will be discharged from the air outlet on the back panel. To ensure the cooling system works normally, leave adequate space around the device.

Figure: Air Circulation

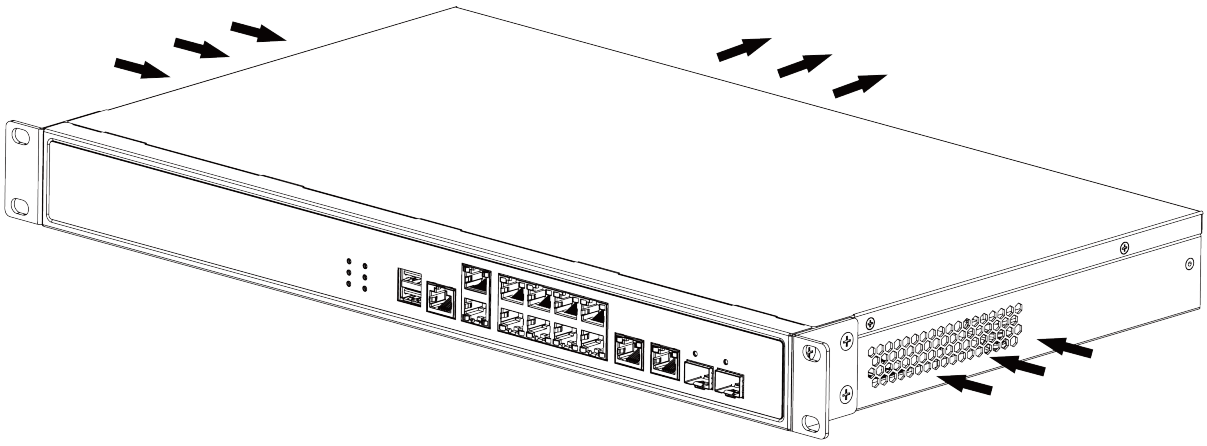

The ambient temperature should be kept between 0 and 45 degrees Celsius. If the fan works abnormally, the system will generate event logs for alerts and the Alarm LED will turn solid red, and then you should replace the fan with a new one.

**Note:** The persistent abnormal fan will cause the system to be unable to dissipate heat in time. If the internal temperature is too high, the system will power off and the current configurations will not be saved.

# SG-6000-A1100

SG-6000-A1100 is a desktop device that can be placed on a workbench. If rack mounting is needed, auxiliary brackets can be purchased as they are not included with the device.

- Front Panel
- Back Panel
- Ports
- LED
- Buttons
- System Parameters
- External Power
- SSD
- Cooling System

## Front Panel

The front panel of SG-6000-A1100 consists of several LED indicators (1 Power LED, 1 Status LED, 1 Management port LED, 1 Alarm LED, 8 GE RJ45 ports LED, and 1 SSD LED).

Figure: SG-6000-A1100 Front Panel

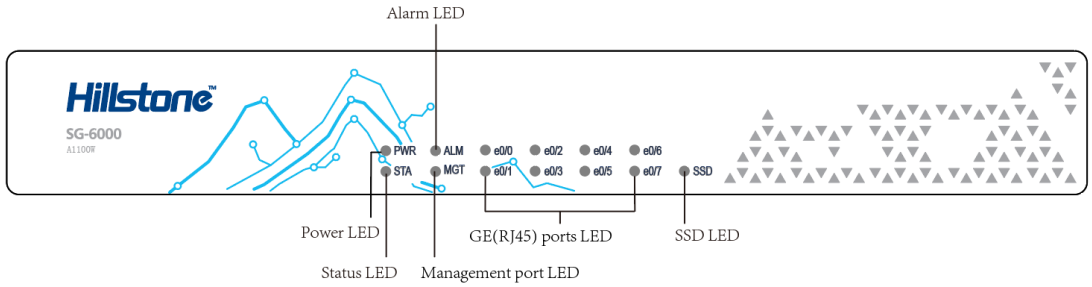


**Related Topics:**

- For instructions of LED Indicators on the front panel, refer toLED.

## Back Panel

SG-6000-A1100 uses the power adapter. The back panel of SG-6000-A1100 consists of 1 grounding screw, 1 DC power interface, 1 power button, 1 CLR button, 1 USB port, 1 Console port, 1 MGT port, eight GE RJ45 ports(ports 4/5, and ports 6/7 are bypassed to each other), and 1 security keyhole.

Figure: SG-6000-A1100 Back Panel

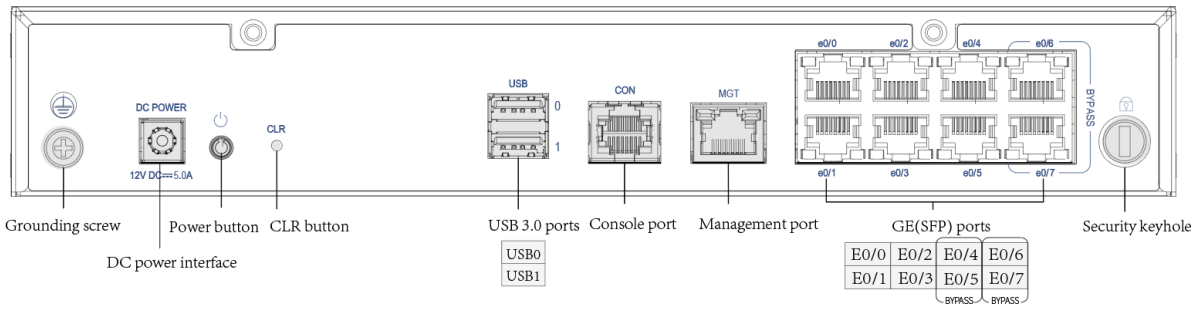


### Related Topics:

- For instructions of ports, refer to Ports.
- For information on how to use the power button and CLR button on the back panel, refer to Buttons.

## Ports

> Note:
>
> - To avoid dust falling into the port socket, you should place a rubber dust cap (originally in the accessory box) over the port.

### *Fixed Ports*

Explanation of Corresponding Relationships for Fixed Ports of SG-6000-A1100.

Table: Explanation of Corresponding Relationships for Fixed Ports of SG-6000-A1100

| Port Type/Number | Port Attributes | Compatible Transceiver Modules |
|---|---|---|
| 8 Gigabyte Ethernet ports (1 pair of bypass) | Connector: RJ-45<br>Port Standard: Auto-MDI/MDIX (crossover cable and straight-through cable autosensing)<br>Frame Format: Ethernet_II/Ethernet_SNAP<br>Negotiation Mode: 10/100/1000Mbps autosensing, Full/half-duplex | - |

### *Management Ports*

The management port description of the SG-6000-A1100 device is shown in the table below.

Table: Explanation of Corresponding Relationships for Management Ports of SG-6000-A1100

| Port Type/Number | Port Attributes | Compatible Transceiver Modules |
|---|---|---|
| 1 MGT port | - | - |
| 1 Console port | The device provides an RS-232C asynchronous serial console port for you to configure the device.<br>Connector: RJ-45<br>Port Standard: RS-232C<br>Baud Rate: 115200 bit/s | - |

| Port Type/Number | Port Attributes | Compatible Transceiver Modules |
| --- | --- | --- |
| | Services: Connect the CON port to the serial port of a PC and run a terminal emulation program on the PC to configure the device<br>Transmission Medium: Console cable | |
| 1 USB 3.0 ports | Connector: USB Type-A interface<br>Port Standard: USB 3.0 host interface<br>Negotiation Mode:1.1/2.0/3.0 auto-sensing | - |

## LED

The following table describes the meanings of LED indicators on the front panels of SG-6000-A1100.

Note:

- The STA LED will remain OFF when there is a boot failure caused by OS software damage. Contact your sales representative if this occurs.

Table: Front Panel LED Descriptions

| LED | LED Name | Color/Status | Description |
| --- | --- | --- | --- |
| PWR | Power LED | Green/Always on | The device power is running normally. |

| LED | LED Name | Color/Status | Description |
|---|---|---|---|
| | | Orange/Red/Always on | The device power is running abnormally. |
| | | Off | The device is powered off. |
| STA | Status LED | Green/Blinking | The system is running normally. |
| | | Off | The system has not been booted/is booting/has failed to boot. |
| ALM | Alarm LED | Red/Always on | The system is sending alarm(s). |
| | | Green/Blinking | The system is waiting. |
| | | Off | The system is running normally. |
| | | Orange/Blinking | The system is using a trial license. |
| | | Orange | The trial license has expired and there is no legitimate license installed in the system. |
| SSD | SSD LED | Green/Blinking | SSD is transmitting data. |
| | | Off | SSD is not present or no data is transmitted. |
| LNK | LNK LED | Green/Always on | The link between this port and its peer device is in normal status. |
| | | Off | The link between this port and its peer device has failed or there is no connection. |

| LED | LED Name | Color/Status | Description |
|---|---|---|---|
| ACT | ACT LED | Orange/Always on | The link between this port and its peer device is in normal status |
| | | Orange/Blinking | The port is sending or receiving data. |
| | | Off | The link between this port and its peer device is abnormal or there is no connection. |

## Buttons

SG-6000-A1100 device includes two buttons, namely the power button and the CLR button.

### *Power Button*

The power button on the back panel of the SG-6000-A1100 is used for shutting down and restarting after shutting down.

- Shutdown: Long press the power button for about 5 seconds. When the PWR LED changes from blinking green to red or orange and the blue power button indicator is off, system is shut down and the power cord can be removed.
- Restart: After being connected to the power supply by the power cord for the first time, the device will automatically start up. If the device is shut down by pressing the power button or using the shutdown command, and the power cord has not been disconnected after shutdown, you can press the power button to power on the device.

### *CLR Button*

The CLR button on the back panel of SG-6000-A1100 is the pinhole of the front panel and is used to reset the device back to the factory default settings. You can restore access to the device with this

button if the login password is lost.

> **Note:** Use this button with caution. Resetting the device will clear all existing configurations.

To restore the factory default settings, take the following steps:

1. After powering on the device, when the system is in operation, use a pin to gently press the CLR button in the pinhole.
2. Wait for the CON port to print the message "Clear button is pressed, the machine will power down," and observe that the STA and ALM LEDs both turn to a solid red. Once the STA and ALM LEDs go out, the device will restart, and during the startup process, the CON port will print the message "CLR button pressed."
3. Once the restart is completed, the factory settings will be restored.

## System Parameters

The following table lists the system parameters of SG-6000-A1100:

Table: System Parameters of SG-6000-A1100

| Item | Description |
|---|---|
| **System Parameters** | |
| Flash Memory | 8GB |
| **Dimensions and Weight** | |
| Height | Desktop Device |
| Dimensions (W×D×H)<br>**Note:**In the data, the width of the device does not include that of rack- | W270.0 mm * D160.0 mm * H44.0mm |

| Item | Description |
| --- | --- |
| mounting ear; the depth of the device does not include that of front and back captive screw and washer; the height of the device does not include that of foot pad. | |
| Weight | Net weight: 1.4kg<br>Gross weight:2.2kg (accessories and packages included) |
| **Rated Power Consumption** | |
| Rated Power Consumption | 50W |
| **Environmental Parameters** | |
| Ambient Temperature | 0℃~40℃ |
| Relative Humidity | 10%~95% (non-condensing) |

## External Power

SG-6000-A1100 uses an external power supply adapter connected to an external AC power supply. The power adapter and AC power cord (IEC60320 C13 connector) are included, and you need to connect them by yourself.

**Related Topics:**

- For instructions on connecting the power supply module's power cable, refer to "Power Cable" on Page 211.

Table: Power Supplies of SG-6000-A1100

| Power Supply Specification | Power Supply Type | Input Voltage Range | Rated Output Power |
|---|---|---|---|
| Single AC Adapter | External Power Adapter | 100~240V AC, 50/60Hz | 65W |

### *External Power Adapter View*

External Power Adapter for SG-6000-A1100 View:

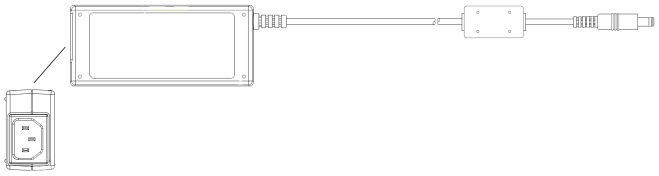

## SSD

SSD on the device is mainly used for saving logs to the local for device monitoring, behavior auditing, etc.

SG-6000-A1100 has 1 hard disk expansion slot on the bottom, which supports the insertion of an SSD. When purchasing the device, you can select whether to include a **240 GB** hard drive. If the device does not come with a hard drive, you can purchase and install one as needed.

**Related Topics:**

- For instructions on installing the SSD, refer to Installing/Removing/Replacing the SSD .

**Note:** The device only supports the original Hillstone SSD. Installing a non-original SSD may cause abnormal running of the device. Only certain models have an SSD installed in place in the factory. To purchase an original SSD, contact your sales representative.

## Cooling System

SG-6000-A1100 do not have fan.

> **Note:** The ambient temperature should be kept between 0 and 40 degrees Celsius.

# SG-6000-A1000

SG-6000-A1000is a desktop device that can be placed on a workbench. If rack mounting is needed, auxiliary brackets can be purchased as they are not included with the device.

- Front Panel
- Back Panel
- Ports
- LED
- Buttons
- System Parameters
- External Power
- SSD
- Cooling System

## Front Panel

The front panel of SG-6000-A1000 consists of several LED indicators (1 Power LED, 1 Status LED, 1 Alarm LED, 4 GE RJ45 ports LED, and 1 SSD LED).

Figure: SG-6000-A1000 Front Panel

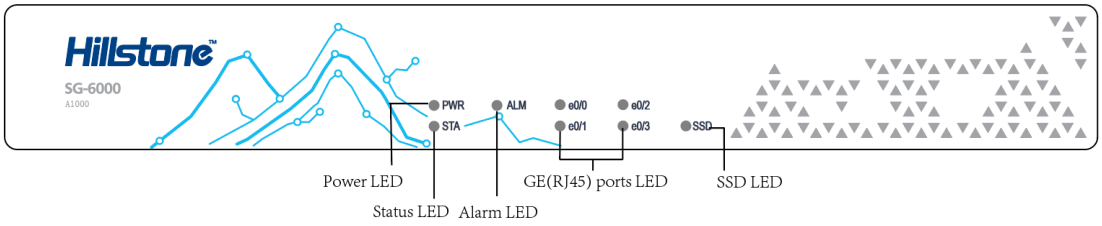


### Related Topics:

- For instructions of LED Indicators on the front panel, refer toLED.

## Back Panel

SG-6000-A1000 uses the power adapter. The back panel of SG-6000-A1000 consists of 1 grounding screw, 1 DC power interface, 1 power button, 1 CLR button, 1 Console port, 1 USB port, four GE RJ45 ports, and 1 security keyhole.

Figure: SG-6000-A1000 Back Panel

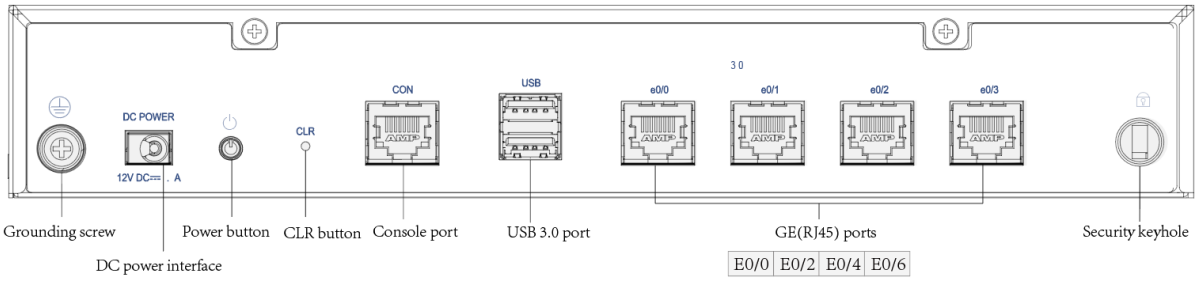


### Related Topics:

- For instructions of ports, refer to Ports.
- For information on how to use the power button and CLR button on the back panel, refer to Buttons.

## Ports

> **Note:**
>
> - To avoid dust falling into the port socket, you should place a rubber dust cap (originally in the accessory box) over the port.

### *Fixed Ports*

Explanation of Corresponding Relationships for Fixed Ports of SG-6000-A1000.

Table: Explanation of Corresponding Relationships for Fixed Ports of SG-6000-A1000

| Port Type/Number | Port Attributes | Compatible Transceiver Modules |
| --- | --- | --- |
| 4 Gigabyte Ethernet ports | Connector: RJ-45<br>Port Standard: Auto-MDI/MDIX (crossover cable and straight-through cable autosensing)<br>Frame Format: Ethernet_II/Eth-ernet_SNAP<br>Negotiation Mode: 10/100/1000Mbps autosensing, Full/half-duplex | - |

### *Management Ports*

The management port description of the SG-6000-A1000 device is shown in the table below.

Table: Explanation of Corresponding Relationships for Management Ports of SG-6000-A1000

| Port Type/Number | Port Attributes | Compatible Transceiver Modules |
| --- | --- | --- |
| 1 Console port | The device provides an RS-232C asynchronous serial console port for you to configure the device.<br>Connector: RJ-45<br>Port Standard: RS-232C<br>Baud Rate: 115200 bit/s<br>Services: Connect the CON port to the serial port of a PC and run a ter-minal emulation program on the PC | - |

| Port Type/Number | Port Attributes | Compatible Transceiver Modules |
|---|---|---|
| | to configure the device<br>Transmission Medium: Console cable | |
| 2 USB 3.0ports | Connector: USB Type-A interface<br>Port Standard: USB 3.0 host interface<br>Negotiation Mode:1.1/2.0/3.0 auto-sensing | - |

## LED

The following table describes the meanings of LED indicators on the front panels of SG-6000-A1000.

Note:

- The STA LED will remain OFF when there is a boot failure caused by OS software damage. Contact your sales representative if this occurs.

Table: Front Panel LED Descriptions

| LED | LED Name | Color/Status | Description |
|---|---|---|---|
| PWR | Power LED | Green/Always on | The device power is running normally. |
| | | Orange/Red/Always on | The device power is running abnormally. |
| | | Off | The device is powered off. |

| LED | LED Name | Color/Status | Description |
|---|---|---|---|
| STA | Status LED | Green/Blinking | The system is running normally. |
| | | Off | The system has not been booted/is booting/has failed to boot. |
| ALM | Alarm LED | Red/Always on | The system is sending alarm(s). |
| | | Green/Blinking | The system is waiting. |
| | | Off | The system is running normally. |
| | | Orange/Blinking | The system is using a trial license. |
| | | Orange | The trial license has expired and there is no legitimate license installed in the system. |
| SSD | SSD LED | Green/Blinking | SSD is transmitting data. |
| | | Off | SSD is not present or no data is transmitted. |
| LNK | LNK LED | Green/Always on | The link between this port and its peer device is in normal status. |
| | | Off | The link between this port and its peer device has failed or there is no connection. |
| ACT | ACT LED | Orange/Blinking | The port is sending or receiving data. |
| | | Off | No data is transmitted on this port. |

## Buttons

SG-6000-A1000device includes two buttons, namely the power button and the CLR button.

### *Power Button*

The power button on the back panel of the SG-6000-A1100 is used for shutting down and restarting after shutting down.

- Shutdown: Long press the power button for about 5 seconds. When the PWR LED changes from blinking green to red or orange and the blue power button indicator is off, system is shut down and the power cord can be removed.
- Restart: After being connected to the power supply by the power cord for the first time, the device will automatically start up. If the device is shut down by pressing the power button or using the shutdown command, and the power cord has not been disconnected after shutdown, you can press the power button to power on the device.

### *CLR Button*

The CLR button on the back panel of SG-6000-A1000 is the pinhole of the front panel and is used to reset the device back to the factory default settings. You can restore access to the device with this button if the login password is lost.

> **Note:** Use this button with caution. Resetting the device will clear all existing configurations.

To restore the factory default settings, take the following steps:

1. After powering on the device, when the system is in operation, use a pin to gently press the CLR button in the pinhole.
2. Wait for the CON port to print the message "Clear button is pressed, the machine will power down," and observe that the STA and ALM LEDs both turn to a solid red. Once the STA

and ALM LEDs go out, the device will restart, and during the startup process, the CON port will print the message "CLR button pressed."

3. Once the restart is completed, the factory settings will be restored.

## System Parameters

The following table lists the system parameters of SG-6000-A1000:

Table: System Parameters of SG-6000-A1000

| Item | Description |
|---|---|
| **System Parameters** | |
| Flash Memory | 8GB |
| **Dimensions and Weight** | |
| Height | Desktop Device |
| Dimensions (W × D × H)<br>**Note:**In the data, the width of the device does not include that of rack-mounting ear; the depth of the device does not include that of front and back captive screw and washer; the height of the device does not include that of foot pad. | W270.0 mm * D160.0 mm * H44.0mm |
| Weight | Net weight: 1.4kg<br>Gross weight:2.2kg (accessories and packages included) |
| **Rated Power Consumption** | |

| Item | Description |
| --- | --- |
| Rated Power Consumption | 30W |
| **Environmental Parameters** | |
| Ambient Temperature | 0℃~40℃ |
| Relative Humidity | 10%~95% (non-condensing) |

## External Power

SG-6000-A1000 uses an external power supply adapter connected to an external AC power supply. The power adapter and AC power cord (IEC60320 C5 connector) are included, and you need to connect them by yourself.

**Related Topics:**

- For instructions on connecting the power supply module's power cable, refer to "Power Cable" on Page 211.

Table: Power Supplies of SG-6000-A1000

| Power Supply Specification | Power Supply Type | Input Voltage Range | Rated Output Power |
| --- | --- | --- | --- |
| Single AC Adapter | External Power Adapter | 100~240V AC, 50/60Hz | 36W |

### *External Power Adapter View*

External Power Adapter for SG-6000-A1000 View:



## SSD

SSD on the device is mainly used for saving logs to the local for device monitoring, behavior auditing, etc.

SG-6000-A1000 has 1 hard disk expansion slot on the bottom, which supports the insertion of an SSD. When purchasing the device, you can select whether to include a **240 GB** hard drive. If the device does not come with a hard drive, you can purchase and install one as needed.

**Related Topics:**

- For instructions on installing the SSD, refer to Installing/Removing/Replacing the SSD .

**Note:** The device only supports the original Hillstone SSD. Installing a non-original SSD may cause abnormal running of the device. Only certain models have an SSD installed in place in the factory. To purchase an original SSD, contact your sales representative.

## Cooling System

SG-6000-A1000 do not have fan.

> **Note:** The ambient temperature should be kept between 0 and 40 degrees Celsius.

# SG-6000-A200/A200W/A200G4B

SG-6000-A200/A200W/A200G4B are desktop devices that can be placed on a workbench. If rack mounting is required, a special tray can be purchased as it is not included with the device.

- Front Panel
- Back Panel
- Ports
- LED
- Buttons
- System Parameters
- External Power
- SSD
- Cooling System

## Front Panel

The front panel of SG-6000-A200 consists of several LED indicators (1 Power LED, 1 Status LED).

Figure: SG-6000-A200 Front Panel

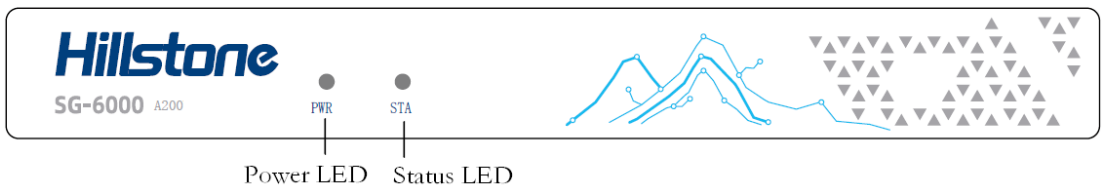


The front panel of SG-6000-A200W consists of several LED indicators (1 Power LED, 1 WLAN LED , and 1 Status LED).

Figure: SG-6000-A200W Front Panel

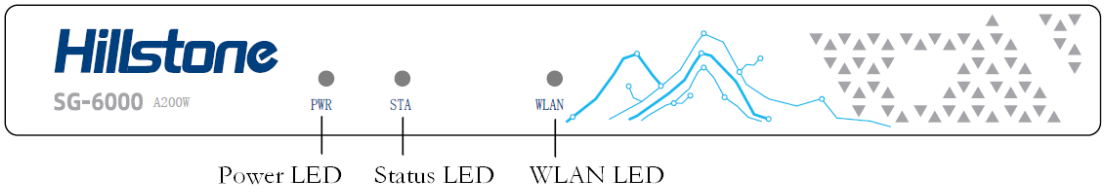


The front panel of SG-6000-A200G4B consists of several LED indicators (1 Power LED, 1 4G LED , and 1 Status LED).

Figure: SG-6000-A200G4B Front Panel

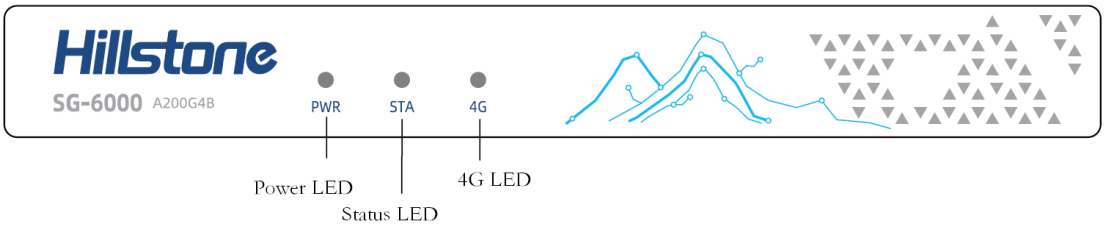


**Related Topics:**

- For instructions of LED Indicators on the front panel, refer to LED.

## Back Panel

SG-6000-A200/A200W uses the power adapter. The back panel of SG-6000-A200/A200W consists of 1 DC power interface, 1 CLR button, 1 Console port, 1 USB port, 5 Gigabyte Ethernet ports, and one GE SFP port.

Figure: SG-6000-A200/A200W Back Panel

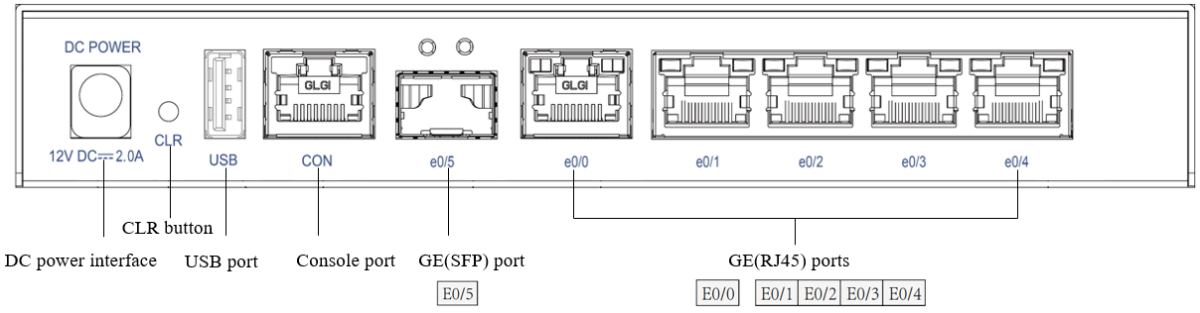

SG-6000-A200G4B uses the power adapter. The back panel of SG-6000-A200G4B consists of 1 DC power interface, 1 CLR button, 1 Console port, 1 USB port, 5 Gigabyte Ethernet ports, one GE SFP port and 1 SMA connector for 4G antenna.

Figure: SG-6000-A200G4B Back Panel

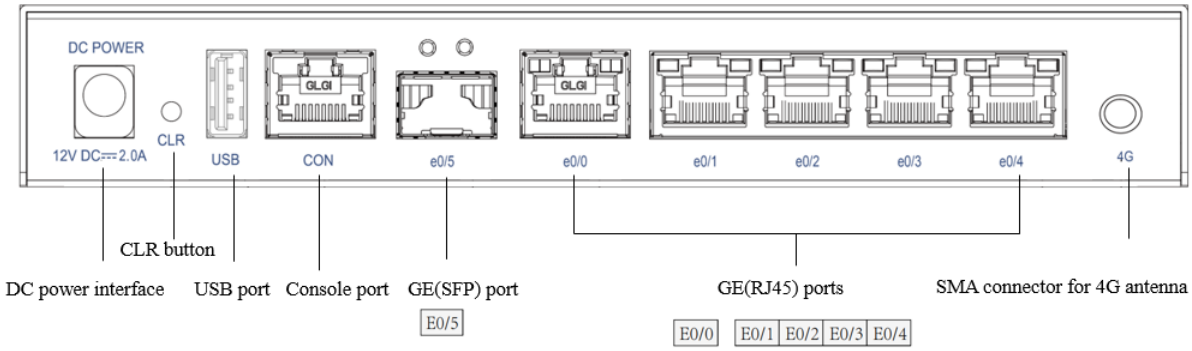


**Related Topics:**

- For instructions of ports, refer to Ports.
- For information on how to use the power button and CLR button on the back panel, refer to Buttons.

## Ports

**Note:**

- The original Hillstone optical module should not be used together with optical modules from other manufacturers, otherwise some errors may occur.
- Before you use the transceiver module, we strongly recommend that you upgrade the device system to a specified version based on the SN format of the transceiver module. This way, you can prevent the transceiver module from being affected by version incompatibility. See Supported Versions for Transceiver Module.

- To avoid dust falling into the port socket, you should place a rubber dust cap (originally in the accessory box) over the port.

### *Fixed Ports*

Explanation of Corresponding Relationships for Fixed Ports of SG-6000-A200/A200W/A200G4B.

Table: Explanation of Corresponding Relationships for Fixed Ports of SG-6000-A200/A200W/A200G4B

| Port Type/Number | Port Attributes | Compatible Transceiver Modules |
|---|---|---|
| 5 Gigabyte Ethernet ports | Connector: RJ-45<br>Port Standard: Auto-MDI/MDIX (crossover cable and straight-through cable autosensing)<br>Frame Format: Ethernet_II/Ethernet_SNAP<br>Negotiation Mode: 10/100/1000Mbps autosensing, Full/half-duplex | - |
| One 10GE SFP port | Connector: SFP<br>Frame Format: Ethernet_II/Ethernet_SNAP<br>Negotiation Mode:<br>• SFP optical module: 1000Mbps | "1GE(SFP) Transceiver Module" on Page 243/"Copper SFP Module" on Page 252 |

| Port Type/Number | Port Attributes | Compatible Transceiver Modules |
| --- | --- | --- |
| | • SFP copper module: 1000Mbps ,Full-duplex | |

### *Management Ports*

The management port description of the SG-6000-A200/A200W/A200G4B device is shown in the table below.

Table: Explanation of Corresponding Relationships for Management Ports of SG-6000-A200/A200W/A200G4B

| Port Type/Number | Port Attributes | Compatible Transceiver Modules |
| --- | --- | --- |
| 1 Console port | The device provides an RS-232C asynchronous serial console port for you to configure the device.<br>Connector: RJ-45<br>Port Standard: RS-232C<br>Baud Rate: 115200 bit/s<br>Services: Connect the CON port to the serial port of a PC and run a terminal emulation program on the PC to configure the device<br>Transmission Medium: Console cable | - |
| 1 USB 2.0 ports | Connector: USB Type-A interface<br>Port Standard: USB 3.0 host inter- | - |

| Port Type/Number | Port Attributes | Compatible Transceiver Modules |
|---|---|---|
| | face<br>Negotiation Mode: 1.1/2.0/3.0 auto-sensing | |

## LED

The following table describes the meanings of LED indicators on the front panels of SG-6000-A200/A200W/A200G4B.

Note:

- The STA LED will remain OFF when there is a boot failure caused by OS software damage. Contact your sales representative if this occurs.

Table: Front Panel LED Descriptions

| LED | LED Name | Color/Status | Description |
|---|---|---|---|
| PWR | Power LED | Green/Always on | The device power is running normally. |
| | | Orange/Red/Always on | The device power is running abnormally. |
| | | Off | The device is powered off. |
| STA | Status LED | Green/Blinking | The system is running normally. |
| | | Off | The system has not been booted/is booting/has failed to boot. |
| LNK | LNK LED | Green/Always on | The link between this port and its |

| LED | LED Name | Color/Status | Description |
|---|---|---|---|
| | | | peer device is in normal status. |
| | | Off | The link between this port and its peer device has failed or there is no connection. |
| ACT | ACT LED | Orange/Blinking | The port is sending or receiving data. |
| | | Off | No data is transmitted on this port. |
| WLAN | WLAN LED | Green | WLAN module is running normally. |
| | | Blinking | WLAN module is sending or receiving data. |
| 4G | 4G LED | Green/Always on | 4G module is running normally. |
| | | Blinking | 4G module is sending or receiving data. |

## Buttons

### *CLR Button*

For the SG-6000-A200/A200W/A200G4B, to restore the factory default settings, take the following steps:

1. After powering on the device, when the system is in operation, use a pin to gently press the CLR button in the pinhole.

2. Wait for the CON port to print the message "Clear button is pressed, the machine will power down," and observe that the STA and ALM LEDs both turn to a solid red. Once the STA and ALM LEDs go out, the device will restart, and during the startup process, the CON port will print the message "CLR button pressed."
3. Once the restart is completed, the factory settings will be restored.

## System Parameters

The following table lists the system parameters of SG-6000-A200/A200W/A200G4B:

Table: System Parameters of SG-6000-A200/A200W/A200G4B

| Item | Description |
|---|---|
| **System Parameters** | |
| Flash Memory | 4GB |
| **Dimensions and Weight** | |
| Height | Desktop Device |
| Dimensions (W×D×H)<br>**Note:**In the data, the width of the device does not include that of rack-mounting ear; the depth of the device does not include that of front and back captive screw and washer; the height of the device does not include that of foot pad. | W180.0 mm * D110.0 mm * H28.0mm |
| Weight (SG-6000-A200) | Net weight: 0.59kg<br>Gross weight: 1.32kg (accessories and packages |

| Item | Description |
| --- | --- |
| | included) |
| Weight (SG-6000-A200W) | Net weight: 0.61kg<br>Gross weight: 1.35kg (accessories and packages included) |
| Weight (SG-6000-A200G4B) | Net weight: 0.63kg<br>Gross weight: 1.38kg (accessories and packages included) |
| **Rated Power Consumption** | |
| Rated Power Consumption | 20W |
| **Environmental Parameters** | |
| Ambient Temperature | 0℃~40℃ |
| Relative Humidity | 10%~95% (non-condensing) |

## External Power

SG-6000-A200/A200W/A200G4B uses an external power adapter to connect to an external AC power supply and provide power to the device. The power adapter is included with the device, allowing you to connect and use it directly.

**Related Topics:**

- For instructions on connecting the power supply module's power cable, refer to "Power Cable" on Page 211.

Table: Power Supplies of SG-6000-A200/A200W/A200G4B

| Power Supply Specification | Power Supply Type | Input Voltage Range | Maximum Output Power |
|---|---|---|---|
| Single AC Adapter | External Power Adapter | 100~240V AC, 50/60Hz | 24W |

### *External Power Adapter View*

External Power Adapter for SG-6000-A200/A200W/A200G4B View:



## SSD

SG-6000-A200/A200W/A200G4B do not have SSD.

## Cooling System

SG-6000-A200/A200W/A200G4B do not have fan.

> **Note:** The ambient temperature should be kept between 0 and 40 degrees Celsius.

# Power Cable

Only applicable to the new-series devices, including SG-6000-5500, SG-6000-3900, SG-6000-3500, SG-6000-2700, SG-6000-2300, SG-6000-2100, SG-6000-1900, SG-6000-1200, and .

Hillstone Networks SG-6000 A Series devices come with different types of power cables depending on the purchased power specifications.

The types of power cables include:

- "AC Power Cable" on Page 211
- "DC Power Cable" on Page 222

**Related Topics:**

- For more information about how to connect power cables, see "Connecting Cables" on Page 305.

## AC Power Cable

Hillstone SG-6000 A series devices come with AC power cables. The grounding point of the power supply in the building needs to be reliably grounded in the building. Typically, buildings have their ground points of the power supply buried during construction. Before connecting the device's AC power cable, confirm that the power supply is grounded.

### *China AC Power Cables*

Hillstone SG-6000 A series devices offer two types of Chinese standard AC power cables depending on the model: China AC Power Cable (IEC60320 C13 Connector) and China AC Power Cable (IEC60320 C5 Connector).

The following figure shows the China AC Power Cable (IEC60320 C13 Connector):

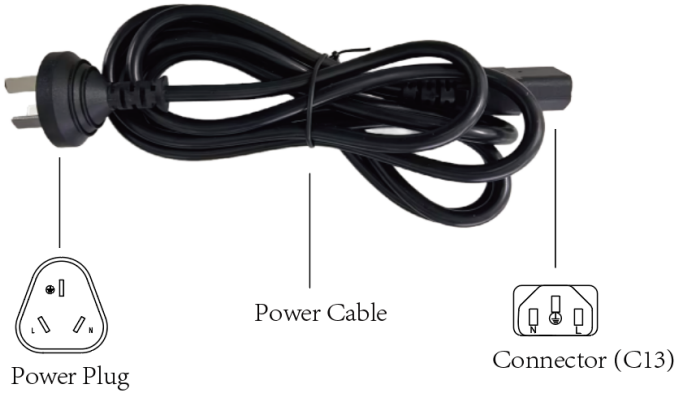


| Attribute | Description |
|---|---|
| Connector | IEC60320 C13 |
| Plug Model | GB1002 |
| Cable Type | RVV 300/500v 3*1mm² |
| Cable Length | 1.8 meters |
| Rated Current/Voltage | 10A/250V |

Suitable device models:

| Power Cable | Supported Device Model |
|---|---|
| China AC Power Cable (IEC60320 C13 Connector) | SG-6000-A7600/A6800 |
| | SG-6000-A5860/A5660/A5560/A5260/A5160 |
| | SG-6000-A5800/A5600/A5555/A5255/A5155 |
| | SG-6000-A5500/A5200/A5100 |
| | SG-6000-A3815/A3615/A2815/A2715 |
| | SG-6000-A3800/A3700/A3600/A3000 |
| | SG-6000-A2800/A2700 |
| | SG-6000-A2600/A2000 |
| | SG-6000-A2200/A1800/A1605-A/A1600 |
| | SG-6000-A1100 |

China AC Power Cable (IEC60320 C5 Connector) is used to connect the power adapter of SG-6000-A1000. The following figure shows this power cable:

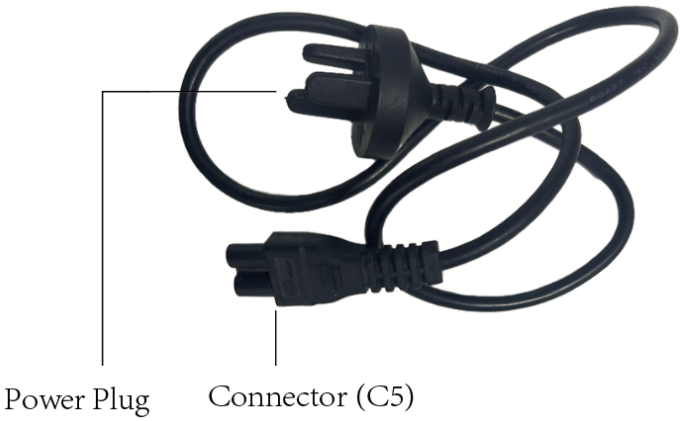


| Attribute | Description |
|---|---|
| Connector | IEC60320 C5 |
| Plug Model | GB1002 |
| Cable Type | RVV 300/500v 3*1mm² |

| Attribute | Description |
| --- | --- |
| Cable Length | 1.8 meters |
| Rated Current/Voltage | 10A/250V |

Suitable device models:

| Power Cable | Supported Device Model |
| --- | --- |
| China AC Power Cable (IEC60320 C5 Connector) | SG-6000-A1000 |

### *AC Power Cables of Other Countries*

Hillstone also provides AC power cables for other countries and regions such as the USA, UK, Brazil, Europe, etc. These cables are not included by default and needs to be purchased separately according to the local standards.

US

The following figure shows the US AC Power Cable (IEC60320 C13 Connector):



| Attribute | Description |
| --- | --- |
| Country/Region Standard | UL/CSA (USA Standard) |

| Attribute | Description |
| --- | --- |
| Connector | IEC60320 C13 |
| Plug | 5-15P |
| Cable Length | 1.8 meters |
| Rated Current/Voltage | 10A/125V |
| Max Operating Temperature | 105° C |
| Cable Type | SVT 3*18AWG |
| Cable Color | Black |

The following figure shows the US AC Power Cable (IEC60320 C5 Connector):



| Attribute | Description |
| --- | --- |
| Country/Region Standard | UL/CSA (USA Standard) |
| Connector | IEC60320 C5 |
| Plug | 5-15P |
| Cable Length | 1.8 meters |
| Rated Cur- | 7A/125V |

| Attribute | Description |
| --- | --- |
| rent/Voltage | |
| Max Operating Temperature | 105° C |
| Cable Type | SVT 3*18AWG |
| Cable Color | Black |

UK

The following figure shows the UK AC Power Cable (IEC60320 C13 Connector):



| Attribute | Description |
| --- | --- |
| Country/Region Standard | UK (British Standard) |
| Connector | IEC60320 C13 |
| Plug | BS 1363A |
| Cable Length | 1.8 meters |
| Rated Current/Voltage | 10A/250V |
| Cable Type | H05VV-F 3*0.75mm² |
| Cable Color | Black |

The following figure shows the UK AC Power Cable (IEC60320 C5 Connector):



| Attribute | Description |
|---|---|
| Country/Region Standard | UK (British Standard) |
| Connector | IEC60320 C5 |
| Plug | BS 1363A |
| Cable Length | 1.8 meters |
| Rated Current/Voltage | 2.5A/250V |
| Cable Type | H05VV-F 3*0.75mm² |
| Cable Color | Black |

### Europe

The following figure shows the Europe AC Power Cable (IEC60320 C13 Connector):



| Attribute | Description |
| --- | --- |
| Country/Region Standard | EU (European Standard) |
| Connector | IEC60320 C13 |
| Plug | CEE7 |
| Cable Length | 1.8 meters |
| Rated Current/Voltage | 10A/250V |
| Cable Type | H05VV-F 3*0.75mm² |
| Cable Color | Black |

The following figure shows the Europe AC Power Cable (IEC60320 C5 Connector):



| Attribute | Description |
| --- | --- |
| Country/Region Standard | EU (European Standard) |
| Connector | IEC60320 C5 |
| Plug | CEE7 |
| Cable Length | 1.8 meters |
| Rated Current/Voltage | 2.5A/250V |

| Attribute | Description |
| --- | --- |
| Cable Type | H05VV-F 3*0.75mm² |
| Cable Color | Black |

**Brazil**

The following figure shows the Brazil AC Power Cable (IEC60320 C13 Connector):



| Attribute | Description |
| --- | --- |
| Country/Region Standard | Brazil (Brazilian Standard) |
| Connector | IEC60320 C13 |
| Plug | NBR 14136 |
| Cable Length | 1.8 meters |
| Rated Current/Voltage | 10A\250V |
| Cable Type | H05VV-F 3G 1.0mm² |
| Cable Color | Black |

The following figure shows the Brazil AC Power Cable (IEC60320 C5 Connector):



| Attribute | Description |
|---|---|
| Country/Region Standard | Brazil (Brazilian Standard) |
| Connector | IEC60320 C5 |
| Plug | NBR 14136 |
| Cable Length | 1.8 meters |
| Rated Current/Voltage | 2.5A\250V |
| Cable Type | H05VV-F 3*1.0mm² |
| Cable Color | Black |

### South Africa

The following figure shows the South Africa AC Power Cable (IEC60320 C13 Connector):



| Attribute | Description |
| --- | --- |
| Country/Region Standard | SABS (South African Standard) |
| Connector | IEC60320 C13 |
| Plug | IS:1293 |
| Cable Length | 1.8 meters |
| Rated Current/Voltage | 10A/250V |
| Cable Type | H05VV-F 3*1.0mm² |
| Cable Color | Black |

The following figure shows the South Africa AC Power Cable (IEC60320 C5 Connector):



| Attribute | Description |
| --- | --- |
| Country/Region Standard | SABS (South African Standard) |
| Connector | IEC60320 C5 |
| Plug | IS:1293 |
| Cable Length | 1.8 meters |

| Attribute | Description |
| --- | --- |
| Rated Current/Voltage | 2.5A/250V |
| Cable Type | H05VV-F 3*1.0mm² |
| Cable Color | Black |

## DC Power Cable

If the power supply type of the purchased device is a power supply module and the power specification is DC, a DC power cable with connectors will be included.

The following figure shows the DC power cable with connectors:

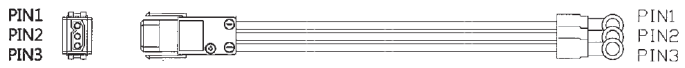


| Attribute | Description |
| --- | --- |
| Cable Color | PIN1: Yellow+Green |
| | PIN2: Black |
| | PIN3: Red |
| Cable Type | PIN1: GND cable (Ground cable) |
| | PIN2： -48V DC cable |
| | PIN3： RTN cable |
| Cable Diameter | 12AWG |

If the power supply type of the purchased device is a fixed power supply and the power specification is DC, two DC power cables without connectors (black and blue, used for distinguishing positive and negative poles) will be included.

The following figure shows the DC power cable without connectors (using the black DC power cable as an example):




| Attribute | Description |
|---|---|
| Cable Type | UL10455 American Standard Certified Power Cable |
| Cable Diameter | 14AWG |
| Cable Length | 2.5 meters |
| Rating | 48V |
| Y-Type Terminal 1 | Screw hole: 3.7mm; Width: 5.7mm |
| Y-Type Terminal 2 | Screw hole: 5.3mm; Width: 8.1mm |

# Expansion Modules

The SG-6000 A-Series device supports multiple expansion modules, including interface modules and bypass modules. You can choose an expansion module as needed. The main functions of these expansion modules are:

- Interface module: Expands the number of ports.
- Bypass module: A bypass module connects two networks. Data between them are transferred by the device in the normal condition. When a specific incident occurs (such as system reboot, abnormal running and sudden power failure), the two networks are connected directly by the bypass module, therefore, the device is bypassed.

**Related Topics:**

- For instructions on how to install and remove expansion modules, see Installing and Removing the Expansion Module.

## Interface Modules

### *IOC-A-2QSFP+*

IOC-A-2QSFP+: Supports 2 QSFP+ ports.

Figure: IOC-A-2QSFP+ Stereo View

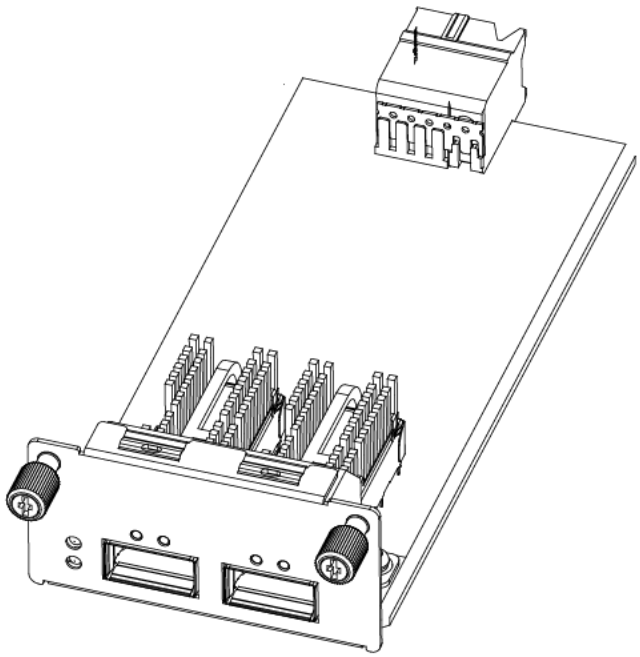

Table: IOC-A-2QSFP+ Descriptions

| Description | | Size |
|---|---|---|
| IOC-A-2QSFP+(Without Bypass) | 2QSFP+ports<br>Net weight:0.19kg<br>Gross weight:0.95 kg (accessories and packages included) | 1U |

## *IOC-A-4SFP+*

IOC-A-4SFP+: Supports 4 SFP+ ports.

Figure: IOC-A-4SFP+ Stereo View

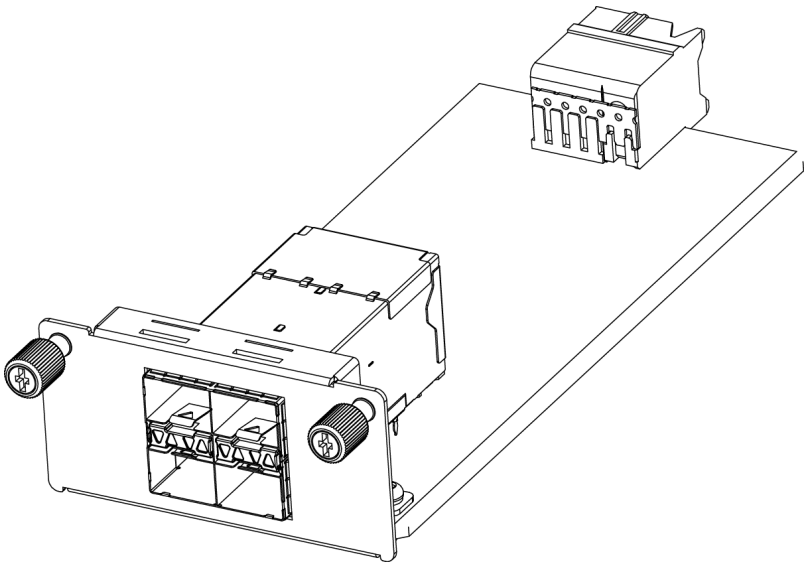

Table: IOC-A-4SFP+ Descriptions

| Description | | Size |
|---|---|---|
| IOC-A-4SFP+ (Without Bypass) | 4 SFP+ ports<br>Net weight:0.19kg<br>Gross weight:0.95 kg (accessories and packages included) | 1U |

## *IOC-A-F-4SFP+*

IOC-A-F-4SFP+: Support 4 SFP+ ports.

Figure: IOC-A-F-4SFP+ Stereo View

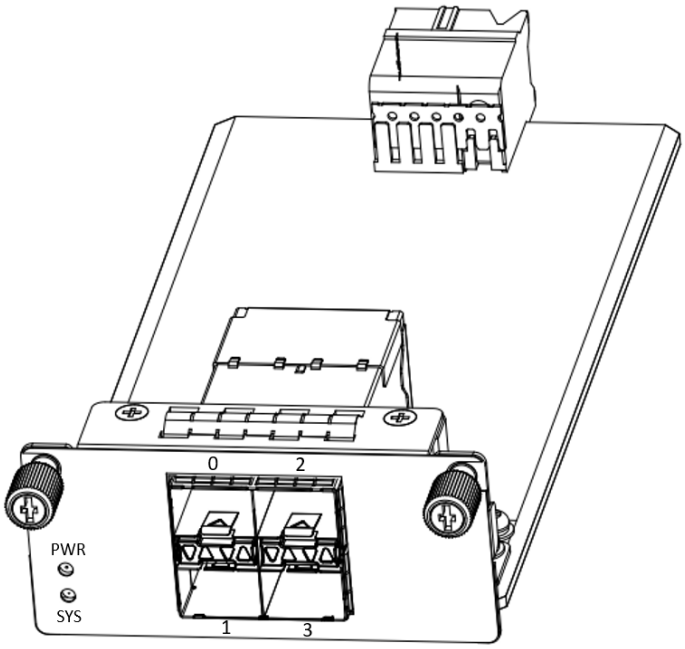


Table: IOC-A-F-4SFP+ Descriptions

| Description | | Size |
|---|---|---|
| IOC-A-F-4SFP+ (Without Bypass) | 4 SFP+ ports<br>Net weight: 0.25kg<br>Gross weight: 1.15kg (accessories and packages included) | 1U |

## *IOC-A-F-8SFP+*

IOC-A-F-8SFP+: Support 8 SFP+ ports.

Figure: IOC-A-F-8SFP+ Stereo View

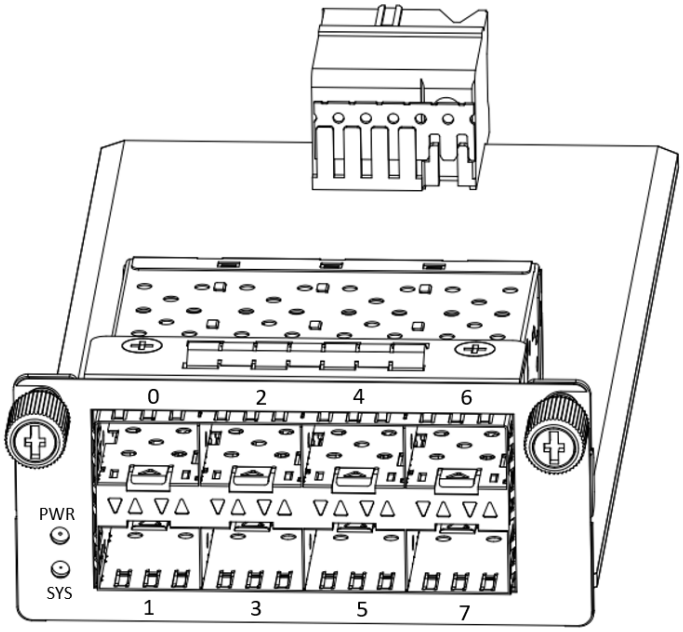


Table: IOC-A-F-8SFP+ Descriptions

| Description | | Size |
|---|---|---|
| IOC-A-F-8SFP+ (Without Bypass) | 8 SFP+ ports<br>Net weight: 0.28kg<br>Gross weight: 1.18kg (accessories and packages included) | 1U |

## *IOC-A-F-8GE*

IOC-A-F-8GE: Support 8 GE(RJ45) ports (ports 0/1, ports 2/3, ports 4/5, and ports 6/7 are bypassed to each other).

Figure: IOC-A-F-8GE Stereo View

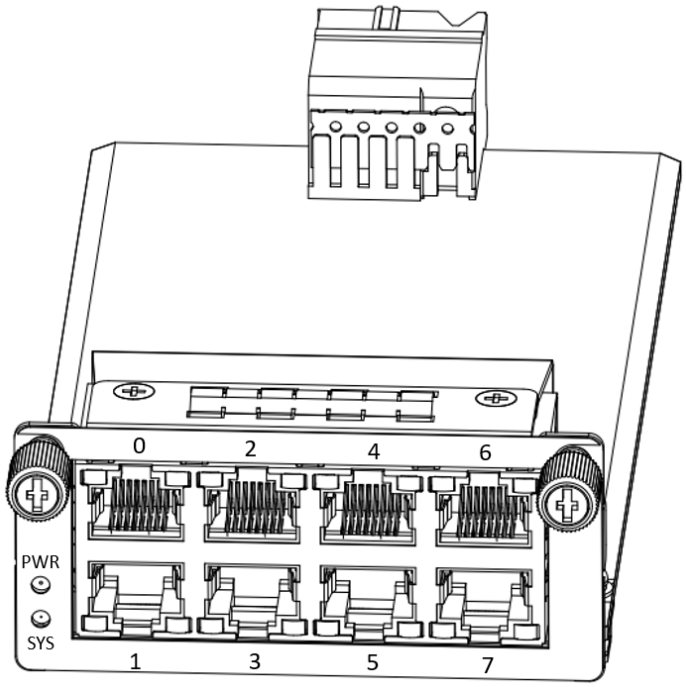


Table: IOC-A-F-8GE Descriptions

| Description | | Size |
|---|---|---|
| IOC-A-F-8GE (four pairs of Bypass) | 8 GE(RJ45) ports<br>Net weight: 0.27kg<br>Gross weight: 1.17kg (accessories and packages included) | 1U |

## Bypass Module

A bypass module connects two networks. Data between them are transferred by the device in the normal condition. When a specific incident occurs (such as sudden power failure or system reboot), the two networks are connected directly by the bypass module, therefore, the device is bypassed. Bypass modules for the SG-6000 A-Series device should be installed in the general expansion slot on the back panel.

IOC-A-2MM-BE supports 1 pairs of multi-mode Bypass optical modules, and IOC-A-2SM-BE supports 1 pairs of single-mode Bypass optical modules. On the Bypass module panel, the Bypass interface is identified with NETWORK, and the interface that is identified with DEVICE is used to

connect to the device self. In addition, 10GE(SFP+) or 1GE (SFP) interfaces are supported to connect with.

### *IOC-A-2MM-BE/IOC-A-2SM-BE*

Figure: IOC-A-2MM-BE/IOC-A-2SM-BE Stereo View

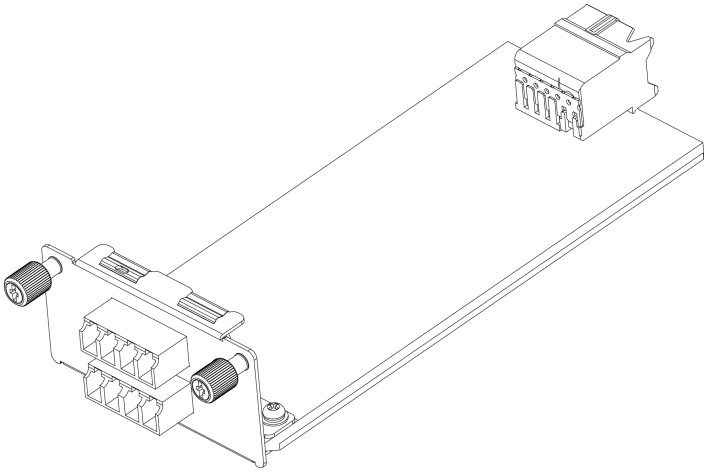

Table: Bypass module and Descriptions of IOC-A-2MM-BE/IOC-A-2SM-BE

| Description | | Size |
|---|---|---|
| IOC-A-2MM-BE | 1 pairs of multi-mode Bypass optical modules<br>Net weight: 0.15kg<br>Gross weight:0.95 kg (accessories and packages included) | 1U |
| IOC-A-2SM-BE | 1 pairs of single-mode bypass optical modules<br>Net weight: 0.15kg<br>Gross weight:0.95 kg (accessories and packages included) | 1U |

### *Connecting Bypass Modules*

Install Bypass module into the expansion slot of the device .For instructions on how to install and remove expansion modules, see Installing and Removing the Expansion Module. Then connect the two ports marked with NETWORK on the panel to different LANs (as shown in Figure LAN1 and LAN2). Connect the two ports marked with DEVICE on the panel to other ports on the device. For details, see the following figure. Solid black lines indicate cable connection. (As follows, take the IOC-A-2MM-BE/2SM-BE Bypass extension as an example)

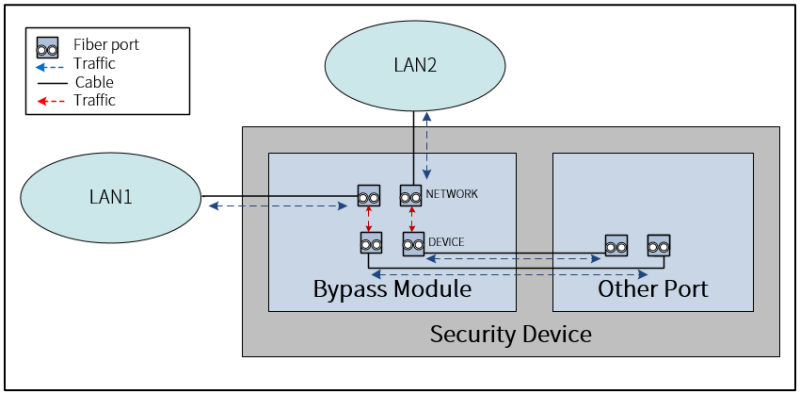


However, in particular situations like power failure or device rebooting, the device is bypassed and LAN1 and LAN2 are physically connected through the bypass module.

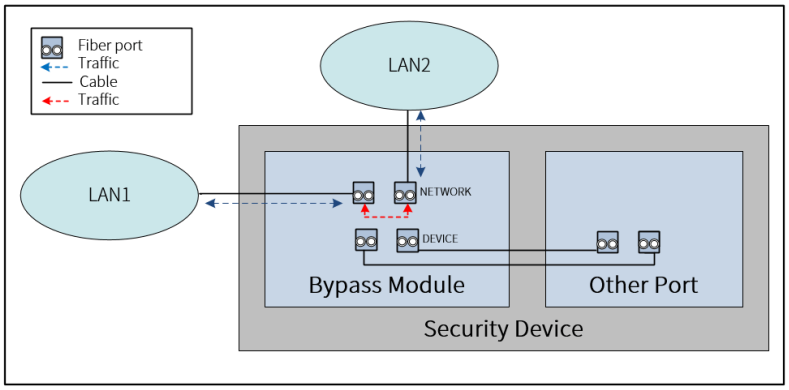


## Expansion Module LED Indicators

The following table describes the meanings of LED indicators on the front panels of expansion modules.

Table: Expansion Module LED Descriptions

| LED | Color/Status | Description |
|---|---|---|
| PWR | Green/Always on | The expansion module is powered on. |
| | Red/Always on | An error occurred during power on. |
| | Off | The expansion module is powered off. |
| SYS | Green/Blinking | The expansion module is running normally. |
| | Red/Always on | The expansion module has failed to boot or there is a connection error. |
| | Off | The expansion module is powered off or is booting. |
| LNK | Green/Always on | The link between this port and its peer device is in normal status. |
| | Off | The link between this port and its peer device has failed or there is no connection. |
| ACT | Orange/Blinking | The port is sending or receiving data. |
| | Off | No data is transmitted on this port. |

**Note:** As the number and type of LED indicators on the front panels may vary from different expansion modules, please refer to the actual product.

## Compatibility of Expansion Modules with Device Models

The following table describes the expansion modules supported by Hillstone A series devices, as well as the transceiver modules that can be used with these expansion modules.

**Related Topics:**

- For a detailed introduction to the expansion module, refer to "Interface Modules" on Page 224;
- For instructions on how to install and remove expansion modules, refer to"Installing and Removing the Expansion Module" on Page 326.

Table: Models and Supported Expansion Modules

| Expansion Module | Expansion Module Model | Model |
|---|---|---|
| Interface module | IOC-A-2QSFP+ (Without Bypass) | SG-6000-A7600/A6800 /A5800/A5600/A5555 /A5500/A5255/A5200 /A5155/A5100/A3815 /A3800/A3700/A3615 |
| | IOC-A-4SFP+ (Without Bypass) | SG-6000-A7600/A6800 /A5800/A5600/A5555 /A5500/A5255/A5200 /A5155/A5100/A3815 /A3800/A3700/A3615 |
| | IOC-A-F-4SFP+ (Without Bypass) | SG-6000-A3815/A3615 /A2815/A2715 |
| | IOC-A-F-8SFP+ (Without Bypass) | SG-6000-A3815/A3615 |

| Expansion Module | Expansion Module Model | Model |
|---|---|---|
| | | /A2815/A2715 |
| | IOC-A-F-8GE(four pairs of Bypass) | SG-6000-A3815/A3615 /A2815/A2715 |
| Bypass module | IOC-A-2MM-BE | SG-6000-A7600/A6800 /A5800/A5600/A5555 /A5500/A5255/A5200 /A5155/A5100/A3815 /A3800/A3700/A3615 |
| | IOC-A-2SM-BE | SG-6000-A7600/A6800 /A5800/A5600/A5555 /A5500/A5255/A5200 /A5155/A5100/A3815 /A3800/A3700/A3615 |

## Configuring an Expansion Module

You can use CLI commands or WebUI to configure and view the expansion modules.

### *Configuring an Interface Module*

When an interface module is recognized and functions normally, its ports work the same way as other ports on the device. For more information about port configuration, for example, binding a port to a zone, specifying an IP address and configuring policy rules, see *StoneOS CLI User Guide* and *StoneOS WebUI User Guide*.

The physical ports on the interface module have predefined names, consisting of port type, slot number and port number, for example, the ports on the IOC-A-4SFP+ module inserted in Slot 1 are named as ethernet1/0, ethernet1/1, ethernet1/2, etc.

### *Viewing Information of Expansion Modules*

To view the status, serial number or other information of expansion modules, use the following commands:

- View status:**show module** [*slot-number*]
- View basic information: **show inventory**

# Transceiver Module/Copper SFP Module

This chapter introduces the transceiver module/copper SFP module supported by Hillstone SG-6000-A devices.


- "Usage Notes for Transceiver Module" on Page 237
- "1GE(SFP) Transceiver Module" on Page 243
- "Copper SFP Module" on Page 252
- "10GE(SFP+) Transceiver Modules" on Page 254
- "40GE(QSFP+)Transceiver Module" on Page 263
- "100GE(QSFP28) Transceiver Module" on Page 273

# Usage Notes for Transceiver Module

## *Safety Precautions*

**ESD protection**: Transceiver modules are active optoelectronic devices and are extremely sensitive to electrostatic discharge. Strict ESD protection measures needs to be taken during operation, such as:

- Try to only touch the module housing, and avoid direct contact with the transceiver module, especially the gold finger area.
- Wear anti-static gloves and wrist straps when plugging or unplugging the module, ensuring one end of the wrist strap is connected to the ESD socket on the device or rack, and the other end is in good contact with your skin.
- Avoid contact between the module and your clothing, as the wrist strap can protect the module from body-induced ESD voltage, but clothing-induced ESD voltage can still damage the module.
- Use original packaging or special anti-static bags during transport or transfer of the transceiver module.

**Note:** If you do not take strict ESD protection measures, ESD damage may occur, causing intermittent or complete failure of the module.

**Laser Safety**: Be cautious of personal safety, as lasers are invisible light and wearing laser safety glasses does not mitigate this risk. Avoid bringing your eyes close to or directly viewing the light-emitting port or fiber connectors when plugging or unplugging the module. Laser exposure can cause eye injury or even blindness. Do not aim strong light at flammable materials.

## *Notes for Cleaning the Optical Fiber Port*

### Cleaning the Fiber Connector End Face

- To **clean the end face of a link fiber that is in use**, ensure that the fiber is not carrying any signal by shutting down the ports on both ends before cleaning. After cleaning, reconnect the fiber to the ports.
- To **clean the end face of an unused link fiber**, take the following steps:

    1. Remove the dust cap from the fiber connector (or tail fiber connector of the optical device) and place the dust cap in a dedicated cleaning supplies box.
    2. Use a clean, lint-free cotton pad to wipe the connector end face once in one direction with the part that hasn't been touched by fingers.
    3. For heavily soiled end faces, moisten the lint-free cotton with cleaning solution and wipe the end face once in one direction, and use another dry, lint-free cotton pad to wipe the end face once in one direction to ensure it is dry.
    4. After cleaning, avoid touching the fiber connector end face and immediately reconnect the fiber ends. If the connector is not in use, cover it with a dust cap.

**Note:** When you cleaning fiber end faces with lint-free cotton pads, take note of the following items:

- Use each lint-free cotton pad only once. During the cleaning process, use the part of the pad that hasn’ t been touched by fingers.
- The fiber connector needs to be perpendicular to the lint-free cotton and wiped along the grain direction of the cotton.

- Always wipe in the same direction to avoid wiping back and forth or in multiple directions along the original path.

## Cleaning the Optical Ports of Transceiver Module

Take the following steps:

1. Remove the dust cap from the optical port of the transceiver module and place the dust cap in a dedicated cleaning supplies box.
2. Use a lint-free swab of the appropriate diameter based on the optical port type (e.g., use a 1.25mm diameter swab for LC ports), moisten it with cleaning solution, insert it into the optical port, and then rotate it one full turn in one direction.
3. Use another dry swab of the same type, insert it into the optical port, and then rotate it one full turn in the same direction.
4. After cleaning, reconnect the fiber ends. For unused transceiver modules, cover the them with a dust cap. For pluggable transceiver modules, wear anti-static gloves or wrist straps and reinsert and secure the transceiver module.

**Note:** When you clean optical ports of transceiver module with lint-free swabs, take note of the following items:

- Clean the fiber end face at the same time when cleaning the transceiver module optical port, as the fiber can recontaminate the optical port.
- Use each lint-free swab only once. If the swab is confirmed to be uncontaminated, it can be reused up to three times at most.

## Supported Versions for Transceiver Module

Before you use a transceiver module, we strongly recommend that you upgrade the device system to a specified version based on the SN format of the transceiver module. This way, you can prevent the transceiver module from being affected by version incompatibility.

| Transceiver Module Type | Transceiver Module | SN Format | Supported Software Version |
|---|---|---|---|
| 10GE(SFP+) Transceiver Modules | TRAN-LR-SFP+ | If the SN is "FA+12-digit number", upgrade the device to the corresponding version. Example: FA000724010786 | Compatible with all historical versions.<br>To obtain better user experience, the following versions optimize the **show transceiver** command to read information and thus are recommended:<br>• StoneOS 5.5R6P32 and later P versions<br>• StoneOS 5.5R8P19 and later P versions<br>• StoneOS 5.5R10P5 and later P versions |
| | | SN in any other format | All versions |
| 40GE(QSFP+)Transceiver Modules | TRAN-SR-QSFP+ | If the SN is "FA+12-digit number", upgrade the device to the corresponding version. | • StoneOS 5.5R6 and all of its later versions<br>• StoneOS 5.5R8P17 and later P versions, 5.5R8P18M13 and later M |

| Transceiver Module Type | Transceiver Module | SN Format | Supported Software Version |
| --- | --- | --- | --- |
| | | Example: FA000724010786 | versions<br>• StoneOS 5.5R9P8 and later P versions<br>• StoneOS 5.5R10P4 and later P versions, 5.5R10F4 and later F versions |
| | | SN in any other format | All versions |
| | TRAN-LR-QSFP+ | If the SN is "FA+12-digit number", upgrade the device to the corresponding version. Example: FA000724010786 | Required versions for SG-6000-A7600/A6800:<br>• StoneOS 5.5R10P6 and later versions<br>Required versions for SG-6000-K7680:<br>• StoneOS 5.5R10P4.32 and later versions<br>All versions |
| | | SN in any other format | All versions |
| | TRAN-QSFP+BiDi | SN in any format | • StoneOS 5.5R8P18 and later P versions, 5.5R8P18M14 and later M versions |

| Transceiver Module Type | Transceiver Module | SN Format | Supported Software Version |
| --- | --- | --- | --- |
| | | | • StoneOS 5.5R9P6 and later P versions, and 5.5R9F6<br>• StoneOS 5.5R10P4 and later P versions, 5.5R10F4 and later F versions |
| 100GE (QSFP28)Transceiver Modules | TRAN-SR4-QSFP28<br>TRAN-LR4-QSFP28<br>TRAN-QSFP28-CWDM4 | If the SN is "FA+12-digit number", upgrade the device to the corresponding version. Example: FA000724010786 | Required versions for SG-6000-A7600/A6800: StoneOS 5.5R10P6 and later versions<br>All versions for other models of devices. |
| | | SN in any other format | All versions |

## 1GE(SFP) Transceiver Module

Hillstone 1GE(SFP) transceiver modules have four models, namely:


- "TRAN-SX" on Page 243
- "TRAN-LX10" on Page 245
- "TRAN-LX40" on Page 248
- "TRAN-LX80" on Page 250


## *TRAN-SX*

### Transceiver Module View

TRAN-SX Transceiver Module View:




### Detailed Specifications

Hillstone 1GE (SFP) transceiver module TRAN-SX, supports hot swapping. Detailed specifications are as follows:

| Model | Detailed Specifications Value |
| --- | --- |
| Form Factors | SFP |
| Interface Specification | 1000Base-SX |
| IEEE Standard | IEEE 802.3-2002 Clause 38 |
| Data Rate | 1.25Gbps |
| Connector Type | LC |
| Fiber Mode (SMF/MMF) | 62.5/125μm<br>MMF |
| | 50/125μm MMF & 62.5/125μm MMF<br>(applies to transceiver modules whose SN is "FA+12-digit number") |
| Max Transmission Distance | 0.3km |
| | 0.55km<br>(applies to transceiver modules whose SN is "FA+12-digit number") |
| Power dissipation (W/mW) | 850nm |
| Max Transmission Distance | <500mW |
| | <1.0W<br>(applies to transceiver modules whose SN is "FA+12-digit number") |

| Model | Detailed Specifications Value |
| --- | --- |
| Transmit Power (dBm) | -9.5～-2.5 |
| | -9.5～-3.0<br>(applies to transceiver modules whose SN is "FA+12-digit number") |
| Max Receiver Sensitivity (dBm) | -13.5 |
| | -17.01<br>(applies to transceiver modules whose SN is "FA+12-digit number") |
| Overload Power (dBm) | 0 |
| | -3<br>(applies to transceiver modules whose SN is "FA+12-digit number") |
| Extinction Ratio (dB) | 9 |
| Operating Case Temperature | -40°C-85°C |
| | SFP |

## *TRAN-LX10*

### Transceiver Module View

TRAN-LX10 Transceiver Module View:




## Detailed Specifications

Hillstone 1GE (SFP) transceiver module TRAN-LX10, supports hot swapping. Detailed specifications are as follows:

| Model | Detailed Specifications Value |
|---|---|
| Form Factors | SFP |
| Interface Specification | 1000Base-LX |
| IEEE Standard | IEEE 802.3-2002 Clause 38 |
| Data Rate | 1.25Gbps |
| Connector Type | LC |
| Fiber Mode (SMF/MMF) | 9/125μm<br>SMF |
| Max Transmission Distance | 10km |
| Center Wavelength | 1310nm |

| Model | Detailed Specifications Value |
| --- | --- |
| Power dissipation (W/mW) | <600mW |
| | <1.0W<br>(applies to transceiver modules whose SN is "FA+12-digit number") |
| Transmit Power (dBm) | -9.5～-3.0 |
| | -8.0～-3.0<br>(applies to transceiver modules whose SN is "FA+12-digit number") |
| Max Receiver Sensitivity (dBm) | -14.5 |
| | -24.95<br>(applies to transceiver modules whose SN is "FA+12-digit number") |
| Overload Power (dBm) | 0 |
| | -3<br>(applies to transceiver modules whose SN is "FA+12-digit number") |
| Extinction Ratio (dB) | 9 |
| Operating Case Temperature | -40ºC-85ºC |
| | -5℃~75℃<br>(applies to transceiver modules whose SN is "FA+12-digit number") |

## *TRAN-LX40*

### Detailed Specifications

Hillstone 1GE (SFP) transceiver module TRAN-LX40, supports hot swapping. Detailed specifications are as follows:

| Model | Detailed Specifications Value |
|---|---|
| Form Factors | SFP |
| Interface Specification | 1000Base-EX |
| IEEE Standard | IEEE 802.3-2002 |
| | IEEE 802.3<br>(applies to transceiver modules whose SN is "FA+12-digit number") |
| Data Rate | 1.25Gbps |
| Connector Type | LC |
| Fiber Mode (SMF/MMF) | 9/125μm<br>SMF |
| Max Transmission Distance | 40km |
| Center Wavelength | 1310nm |
| Power dissipation (W/mW) | <700mW |
| | <1.0W<br>(applies to transceiver modules whose SN is "FA+12-digit number") |

| Model | Detailed Specifications Value |
| --- | --- |
| Transmit Power (dBm) | 0～5.0 |
| | -4.0～3.0<br>(applies to transceiver modules whose SN is "FA+12-digit number") |
| Max Receiver Sensitivity (dBm) | -21 |
| | -24.95<br>(applies to transceiver modules whose SN is "FA+12-digit number") |
| Overload Power (dBm) | 0 |
| | -3<br>(applies to transceiver modules whose SN is "FA+12-digit number") |
| Extinction Ratio (dB) | 9 |
| | 6<br>(applies to transceiver modules whose SN is "FA+12-digit number") |
| Operating Case Temperature | -10ºC-70ºC |
| | -40ºC-90ºC<br>(applies to transceiver modules whose SN is "FA+12-digit number") |

**Note:** The components of some TRAN-LX40 transceiver modules may be updated during production, which leads to incompatibility of certain device software version. Before you use a TRAN-LX40 transceiver module, we strongly recommend that you upgrade the device system to a specified version based on the SN format of the transceiver module. This way, you can prevent the transceiver module from being affected by version incompatibility.

| SN Format | Supported Software Version |
|---|---|
| If the SN is "FA+12-digit number", upgrade the device to the corresponding version.<br>Example: FA000724010786 | Required versions:<br>• StoneOS 5.5R10P6 |
| SN in any other format | All versions |

## *TRAN-LX80*

### Transceiver Module View

TRAN-LX80 Transceiver Module View:



## Detailed Specifications

Hillstone 1GE (SFP) transceiver module TRAN-LX80, supports hot swapping. Detailed specifications are as follows:

| Model | Detailed Specifications Value |
|---|---|
| Form Factors | SFP |
| Interface Specification | 1000Base-ZX |
| IEEE Standard | IEEE 802.3-2002 |
| Data Rate | 1.25Gbps |
| Connector Type | LC |
| Fiber Mode (SMF/MMF) | 9/125μm<br>SMF |
| Max Transmission Distance | 80km |
| Center Wavelength | 1550nm |
| Power dissipation (W/mW) | <700mW |
| Transmit Power (dBm) | 0～5.0 |
| Max Receiver Sensitivity (dBm) | -14.5 |
| Overload Power (dBm) | 0 |
| Extinction Ratio (dB) | 9 |
| Operating Case Temperature | -10ºC-70ºC |

## Copper SFP Module

The model of Hillstone copper SFP is:

- "TRAN-GC" on Page 252

### *TRAN-GC*

### Detailed Specifications

Detailed specifications of TRAN-GC are as follows:

| Model | Detailed Specifications Value |
|---|---|
| Form Factors | SFP |
| Interface Specification | 1000 BASE-T |
| IEEE Standard | IEEE 802.3ab |
| Data Rate | 1.25Gbps |
| Connector Type | RJ-45 |
| Cable | Network Cable |
| Max Transmission Distance | 0.1km |
| Hot-swappable | Yes |

**Note:**

Before using the TRAN-GC optical module with SN "FA+12-digit number", please note the following:

- It is strongly recommended that you upgrade your device software version to StoneOS 5.5R11P3 or later to avoid compatibility issues that may prevent the optical module from functioning properly.

- When connecting using the TRAN-GC optical module, ensure that the peer interface must be a gigabit Ethernet port and do not allow the interface speed to be reduced to 10/100Mbps.

## 10GE(SFP+) Transceiver Modules

Hillstone 10GE(SFP+) transceiver modules have four models, namely:


- "TRAN-SR-SFP+" on Page 254
- "TRAN-LR-SFP+" on Page 256
- "TRAN-SFP+-LX40" on Page 259
- "TRAN-SFP+-LX80" on Page 261


### *TRAN-SR-SFP+*

#### Transceiver Module View

TRAN-SR-SFP+ Transceiver Module View:




#### Detailed Specifications

Hillstone 10GE(SFP+) transceiver module TRAN-SR-SFP+, supports hot swapping. Detailed specifications are as follows:

| Model | Detailed Specifications Value |
|---|---|
| Form Factors | SFP+ |

| Model | Detailed Specifications Value |
| --- | --- |
| Interface Specification | 10GBase-SR |
| IEEE Standard | IEEE 802.3 Clause 52 |
| Data Rate | 10Gbps |
| Connector Type | LC |
| Fiber Mode (SMF/MMF) | 50/125μm MMF |
| Max Transmission Distance | 0.3km (984.3ft) |
| Center Wavelength | 850nm |
| Power dissipation (W/mW) | 450mW |
| | <1.0W<br>(applies to transceiver modules whose SN is "FA+12-digit number") |
| Transmit Power (dBm) | -7.3～+6.0 |
| | -6.0～-1.0<br>(applies to transceiver modules whose SN is "FA+12-digit number") |
| Max Receiver Sensitivity (dBm) | -7.5 |
| | -12.01<br>(applies to transceiver modules whose SN is "FA+12-digit number") |

| Model | Detailed Specifications Value |
| --- | --- |
| Overload Power (dBm) | 6.0 |
| | -1<br>(applies to transceiver modules whose SN is "FA+12-digit number") |
| Extinction Ratio (dB) | - |
| | 3<br>(applies to transceiver modules whose SN is "FA+12-digit number") |
| Operating Case Temperature | 0ºC-70ºC |
| | -5ºC-75ºC<br>(applies to transceiver modules whose SN is "FA+12-digit number") |

## *TRAN-LR-SFP+*

### Transceiver Module View

TRAN-LR-SFP+ Transceiver Module View:




## Detailed Specifications

Hillstone 10GE(SFP+) transceiver module TRAN-LR-SFP+, supports hot swapping. Detailed specifications are as follows:

| Model | Detailed Specifications Value |
|---|---|
| Form Factors | SFP+ |
| Interface Specification | 10GBase-LR |
| IEEE Standard | IEEE 802.3ae |
| Data Rate | 10Gbps |
| Connector Type | LC |
| Fiber Mode (SMF/MMF) | 9/125μm SMF |
| Max Transmission Distance | 10km |
| Center Wavelength | 1310nm |

| Model | Detailed Specifications Value |
| --- | --- |
| Power dissipation (W/mW) | <1.0W |
| | <1.2W<br>(applies to transceiver modules whose SN is "FA+12-digit number") |
| Transmit Power (dBm) | -8.2～+0.5 |
| Max Receiver Sensitivity (dBm) | -10.3 |
| | -14.4<br>(applies to transceiver modules whose SN is "FA+12-digit number") |
| Transmit Power (dBm) | +0.5 |
| Extinction Ratio (dB) | 3.5 |
| Operating Case Temperature | -5ºC-70ºC |
| | 0ºC-70ºC<br>(applies to transceiver modules whose SN is "FA+12-digit number") |

**Note:** The components of some TRAN-LR-SFP+ transceiver modules may be updated during production, which leads to incompatibility of certain device software version. Before you use a TRAN-LR-SFP+ transceiver module, we strongly recommend that you upgrade the device system to a specified version based on the SN format of the transceiver module. This way, you can prevent the transceiver module from being affected by version incompatibility.

| SN Format | Supported Software Version |
| --- | --- |
| If the SN is "FA+12-digit number", upgrade the device to the corresponding version.<br>Example: FA000724010786 | Compatible with all historical versions.<br>To obtain better user experience, the following versions optimize the **show transceiver** command to read information and thus are recommended:<br>• StoneOS 5.5R6P32 and later P versions<br>• StoneOS 5.5R8P19 and later P versions<br>• StoneOS 5.5R10P5 and later P versions |
| SN in any other format | All versions |

### *TRAN-SFP+-LX40*

#### Transceiver Module View

TRAN-SFP+-LX40 Transceiver Module View:




## Detailed Specifications

Hillstone 10GE(SFP+) transceiver module TRAN-SFP+-LX40, supports hot swapping. Detailed specifications are as follows:

| Model | Detailed Specifications Value |
|---|---|
| Form Factors | SFP+ |
| Interface Specification | 10GBase-ER |
| IEEE Standard | IEEE 802.3ae |
| Data Rate | 10Gbps |
| Connector Type | LC |
| Fiber Mode (SMF/MMF) | 9/125μm SMF |
| Max Transmission Distance | 40km |
| Center Wavelength | 1550nm |
| Power dissipation (W/mW) | <1.5W |

| Model | Detailed Specifications Value |
| --- | --- |
| Transmit Power (dBm) | -4.7～+4.0 |
| Max Receiver Sensitivity (dBm) | -11.3 |
| Transmit Power (dBm) | -1.0 |
| Extinction Ratio (dB) | 3.0 |
| Operating Case Temperature | 0°C-70°C |

## *TRAN-SFP+-LX80*

### Transceiver Module View

TRAN-SFP+-LX80 Transceiver Module View:




### Detailed Specifications

Hillstone 10GE(SFP+) transceiver module TRAN-SFP+-LX80, supports hot swapping. Detailed specifications are as follows:

| Model | Detailed Specifications Value |
| --- | --- |
| Form Factors | SFP+ |
| Interface Specification | 10GBase-ZR |
| IEEE Standard | IEEE 802.3-2008 Clause 52 |
| Data Rate | 10Gbps |
| Connector Type | LC |
| Fiber Mode (SMF/MMF) | 9/125μm SMF |
| Max Transmission Distance | 80km |
| Center Wavelength | 1550nm |
| Power dissipation (W/mW) | <1.2W |
| Transmit Power (dBm) | 0～+4.0 |
| Max Receiver Sensitivity (dBm) | -24 |
| Transmit Power (dBm) | 4.0 |
| Extinction Ratio (dB) | 9.0 |
| Operating Case Temperature | -5℃-70℃ |

## 40GE(QSFP+)Transceiver Module

Hillstone 40GE(QSFP+) transceiver modules have four models, namely:


- "TRAN-LR-QSFP+" on Page 263
- "TRAN-SR-QSFP+" on Page 266
- "TRAN-QSFP+-SWDM4" on Page 269
- "TRAN-QSFP+BiDi" on Page 271


### *TRAN-LR-QSFP+*

#### Transceiver Module View

TRAN-LR-QSFP+ Transceiver Module View:

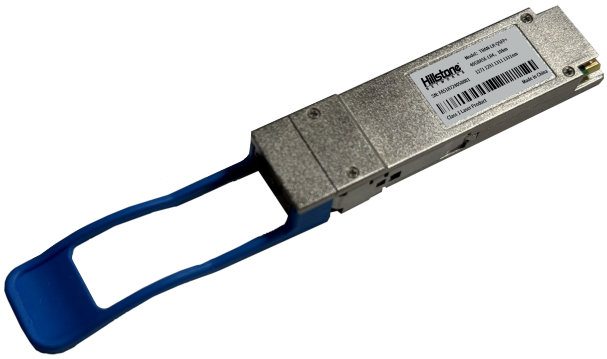

#### Detailed Specifications

Hillstone 40GE(QSFP+)transceiver module TRAN-LR-QSFP+, supports hot swapping. Detailed specifications are as follows:

| Model | Detailed Specifications Value |
|---|---|
| Form Factors | QSFP+ |
| Interface Specification | 40GBase-LR4 |

| Model | Detailed Specifications Value |
| --- | --- |
| IEEE Standard | IEEE 802.3ba |
| Data Rate | 40Gbps |
| Connector Type | LC |
| Fiber Mode (SMF/MMF) | 9/125μm SMF |
| Max Transmission Distance | 10km |
| Center Wavelength | 1310nm |
| | 1271nm/1291nm/1311nm/1331nm<br>(applies to transceiver modules whose SN is "FA+12-digit number") |
| Power dissipation (W/mW) | <3.5W |
| Transmit Power (dBm) | -7.5～+2.3 |
| | -15～+3.5<br>(applies to transceiver modules whose SN is "FA+12-digit number") |
| Max Receiver Sensitivity (dBm) | -9.6 |
| | -11.5<br>(applies to transceiver modules whose SN is "FA+12-digit number") |

| Model | Detailed Specifications Value |
| --- | --- |
| Overload Power (dBm) | 2.3 |
| | 3.4<br>(applies to transceiver modules whose SN is "FA+12-digit number") |
| Extinction Ratio (dB) | 3.5 |
| Operating Case Temperature | 0°C-70°C |
| Hot-swappable | Yes |

Note:

- The components of some TRAN-LR-QSFP+ transceiver modules may be updated during production, which leads to incompatibility of certain device software version. Before you use a TRAN-LR-QSFP+ transceiver module, we strongly recommend that you upgrade the device system to a specified version based on the SN format of the transceiver module. This way, you can prevent the transceiver module from being affected by version incompatibility.

| SN Format | Supported Software Version |
| --- | --- |
| If the SN is "FA+12-digit number", upgrade the device to the corresponding version.<br>Example: FA000724010786 | Required versions for SG-6000-A7600/A6800:<br>• StoneOS 5.5R10P6 and later versions<br>Required versions for SG-6000-K7680: |

| SN Format | Supported Software Version |
| --- | --- |
| | • StoneOS 5.5R10P4.32 and later versions<br>All versions |
| SN in any other format | All versions |

## *TRAN-SR-QSFP+*

### Transceiver Module View

TRAN-SR-QSFP+ Transceiver Module View:



### Detailed Specifications

Hillstone 40GE(QSFP+) transceiver module TRAN-SR-QSFP+, supports hot swapping. Detailed specifications are as follows:

| Model | Detailed Specifications Value |
| --- | --- |
| Form Factors | QSFP+ |
| Interface Specification | 40GBase-SR4 |

| Model | Detailed Specifications Value |
| --- | --- |
| IEEE Standard | IEEE 802.3ba |
| Data Rate | 40Gbps |
| Connector Type | MPO |
| Fiber Mode (SMF/MMF) | 50/125μm MMF |
| Max Transmission Distance | 0.3km(OM3 Fiber ) |
| | 0.4km(OM4 Fiber) |
| Center Wavelength | 850nm |
| Power dissipation (W/mW) | <1.5W |
| Transmit Power (dBm) | -7.5～+0.5 |
| | -7.6～+2.4<br>(applies to transceiver modules whose SN is "FA+12-digit number") |
| Max Receiver Sensitivity (dBm) | -7.5 |
| | -9.9<br>(applies to transceiver modules whose SN is "FA+12-digit number") |
| Overload Power (dBm) | 2.4 |
| | 2.5<br>(applies to transceiver modules whose SN is "FA+12-digit number") |
| Extinction Ratio (dB) | 3.0 |

| Model | Detailed Specifications Value |
| --- | --- |
| Operating Case Temperature | 0°C-70°C |
| Hot-swappable | Yes |

Note:

- The components of some TRAN-SR-QSFP+ transceiver modules may be updated during production, which leads to incompatibility of certain device software version. Before you use a TRAN-SR-QSFP+ transceiver module, we strongly recommend that you upgrade the device system to a specified version based on the SN format of the transceiver module. This way, you can prevent the transceiver module from being affected by version incompatibility.

| SN Format | Supported Software Version |
| --- | --- |
| If the SN is "FA+12-digit number", upgrade the device to the corresponding version.<br>Example: FA000724010786 | Required versions :<br>• StoneOS 5.5R6 and all of its later versions<br>• StoneOS 5.5R8P17 and later P versions, 5.5R8P18M13 and later M versions<br>• StoneOS 5.5R9P8 and later P versions<br>• StoneOS 5.5R10P4 and later P versions, 5.5R10F4 and later F versions |

| SN Format | Supported Software Version |
| --- | --- |
| SN in any other format | All versions |

## *TRAN-QSFP+-SWDM4*

### Transceiver Module View

TRAN-QSFP+-SWDM4 Transceiver Module View:



### Detailed Specifications

Hillstone 40GE(QSFP+) transceiver module TRAN-QSFP+-SWDM4, supports hot swapping. Detailed specifications are as follows:

| Model | Detailed Specifications Value |
| --- | --- |
| Form Factors | QSFP+ |
| Interface Specification | 40GBase-SWDM4 |
| IEEE Standard | IEEE 802.3ba |

| Model | Detailed Specifications Value |
|---|---|
| Data Rate | 40Gbps |
| Connector Type | LC |
| Fiber Mode (SMF/MMF) | 50/125um MMF |
| Max Transmission Distance | 0.3km(OM3 Fiber) |
| | 0.4km(OM4 Fiber) |
| Center Wavelength | 850nm/880nm/ 910nm/940nm |
| Power dissipation (W/mW) | <3.5W |
| Transmit Power (dBm) | -7.5～+3.0 |
| Max Receiver Sensitivity (dBm) | -5.7 |
| Overload Power (dBm) | 3.0 |
| Extinction Ratio (dB) | 2.0 |
| Operating Case Temperature | 0ºC-70ºC |
| Hot-swappable | Yes |

**Note:**

- The transceiver module TRAN-QSFP+-SWDM4 **cannot interoperate with** the transceiver module TRAN-QSFP+BiDi.

## *TRAN-QSFP+BiDi*

### Detailed Specifications

Hillstone 40GE(QSFP+)transceiver module TRAN-QSFP+BiDi, supports hot swapping. Detailed specifications are as follows:

| Model | Detailed Specifications Value |
|---|---|
| Form Factors | QSFP+ |
| Interface Specification | 40GBase-BiDi |
| IEEE Standard | IEEE 802.3ba |
| Data Rate | 40Gbps |
| Connector Type | LC |
| Fiber Mode (SMF/MMF) | 50/125μm MMF |
| Max Transmission Distance | 0.1km(OM3 Fiber) |
| | 0.15km(OM4 Fiber) |
| Center Wavelength | 850nm/900nm |
| Power dissipation (W/mW) | <3.5W |
| Transmit Power (dBm) | -4.0～+5.0 |
| Max Receiver Sensitivity (dBm) | -4.5 |
| Overload Power (dBm) | 5.0 |
| Extinction Ratio (dB) | 3.0 |

| Model | Detailed Specifications Value |
| --- | --- |
| Operating Case Temperature | 10°C-70°C |
| Hot-swappable | Yes |

Note:

- The transceiver module TRAN-QSFP+-SWDM4 **cannot interoperate with** the transceiver module TRAN-QSFP+BiDi.
- The components of some TRAN-QSFP+BiDi transceiver modules may be updated during production, which leads to incompatibility of certain device software version. Before you use a TRAN-QSFP+BiDi transceiver module, we strongly recommend that you upgrade the device system to a specified version based on the SN format of the transceiver module. This way, you can prevent the transceiver module from being affected by version incompatibility.

| SN Format | Supported Software Version |
| --- | --- |
| SN in any format | • StoneOS 5.5R8P18 and later P versions, 5.5R8P18M14 and later M versions<br>• StoneOS 5.5R9P6 and later P versions, and 5.5R9F6<br>• StoneOS 5.5R10P4 and later P versions, 5.5R10F4 and later F versions |

## 100GE(QSFP28) Transceiver Module

Hillstone 100GE(QSFP28) transceiver modules have 3 models, namely:


- "TRAN-LR4-QSFP28" on Page 273
- "TRAN-SR4-QSFP28" on Page 275
- "TRAN-QSFP28-CWDM4" on Page 277


### *TRAN-LR4-QSFP28*

#### Transceiver Module View

TRAN-LR4-QSFP28 Transceiver Module View:



#### Detailed Specifications

Hillstone 100GE(QSFP28) transceiver module TRAN-LR4-QSFP28, supports hot swapping. Detailed specifications are as follows:

| Model | Detailed Specifications Value |
|---|---|
| Form Factors | QSFP28 |
| Interface Specification | 100GBASE-LR4 |

| Model | Detailed Specifications Value |
| --- | --- |
| IEEE Standard | IEEE 802.3bm |
| | IEEE 802.3ba(applies to transceiver modules whose SN is "FA+12-digit number") |
| Data Rate | 100Gbps |
| Connector Type | LC |
| Fiber Mode (SMF/MMF) | 9/125μm SMF |
| Max Transmission Distance | 10km |
| Center Wavelength | 1295nm/1300nm/1304nm/1309nm |
| Power dissipation (W/mW) | <3.5 W |
| | <4 W(applies to transceiver modules whose SN is "FA+12-digit number") |
| Transmit Power (dBm) | -4.3～+4.5 |
| Max Receiver Sensitivity (dBm) | -6.8 |
| | -10.6(applies to transceiver modules whose SN is "FA+12-digit number") |
| Overload Power (dBm) | 4.5 |
| Extinction Ratio (dB) | 4 |
| Operating Case Temperature | 0ºC-70ºC |
| Hot-swappable | Yes |

**Note:** When you use the 100GE (QSFP28) transceiver module, you need to check whether the FEC statuses of the transceiver module at both ends are consistent. If not consistent, the link will fail to be used for connection as expected.

## *TRAN-SR4-QSFP28*

### Transceiver Module View

TRAN-SR4-QSFP28 Transceiver Module View:



### Detailed Specifications

Hillstone 100GE(QSFP28) transceiver module TRAN-SR4-QSFP28, supports hot swapping. Detailed specifications are as follows:

| Model | Detailed Specifications Value |
|---|---|
| Form Factors | QSFP28 |
| Interface Specification | 100GBASE-SR4 |
| IEEE Standard | IEEE 802.3-2015 CAUI-4 |
| | IEEE 802.3bm(applies to transceiver modules whose SN is "FA+12-digit number") |

| Model | Detailed Specifications Value |
| --- | --- |
| Data Rate | 100Gbps |
| Connector Type | MPO |
| Number of Fiber Cores | 12 |
| | 8/12 (applies to transceiver modules whose SN is "FA+12-digit number") |
| Fiber Mode (SMF/MMF) | 50/125μm OM3/OM4MMF |
| Max Transmission Distance | 0.07km(OM3 optical fiber) |
| | 0.1km(OM4 optical fiber) |
| Center Wavelength | 850nm |
| Power dissipation (W/mW) | <2.5W |
| | <3.5W(applies to transceiver modules whose SN is "FA+12-digit number") |
| Transmit Power (dBm) | -8.4～+2.4 |
| Max Receiver Sensitivity (dBm) | -5.2 |
| | -9.2(applies to transceiver modules whose SN is "FA+12-digit number") |
| Overload Power (dBm) | 2.4 |
| Extinction Ratio (dB) | 2 |
| Operating Case Temperature | 0ºC-70ºC |
| Hot-swappable | Yes |

**Note:** When you use the 100GE (QSFP28) transceiver module, you need to check whether the FEC statuses of the transceiver module at both ends are consistent. If not consistent, the link will fail to be used for connection as expected.

## *TRAN-QSFP28-CWDM4*

### Detailed Specifications

Hillstone 100GE(QSFP28) transceiver module TRAN-QSFP28-CWDM4, supports hot swapping. Detailed specifications are as follows:

| Model | Detailed Specifications Value |
|---|---|
| Form Factors | QSFP28 |
| Interface Specification | 100GBASE-CWDM4 |
| IEEE Standard | IEEE 802.3bm |
| Data Rate | 100Gbps |
| Connector Type | LC |
| Fiber Mode (SMF/MMF) | 9/125μm SMF |
| Max Transmission Distance | 2km |
| Center Wavelength | 1271nm/1291nm/1311nm/1331nm |
| Power dissipation (W/mW) | <3.5 W |
| Transmit Power (dBm) | -6.5～+2.5 |
| Max Receiver Sensitivity (dBm) | -7.3 |
| Overload Power (dBm) | 3.5 |

| Model | Detailed Specifications Value |
| --- | --- |
| Extinction Ratio (dB) | 3.5 |
| Operating Case Temperature | 0ºC-70ºC |
| Hot-swappable | Yes |

**Note:** When you use the 100GE (QSFP28) transceiver module, you need to check whether the FEC statuses of the transceiver module at both ends are consistent. If not consistent, the link will fail to be used for connection as expected.

## Optical Ports Features: Interoperability/Backward Compatibility/Copper SFP Compatibility

Hillstone devices support the following five optical ports: the 100GE(QSFP28) optical port, the 40GE(QSFP+) optical port, the 10GE(XFP) optical port, the 10GE(SFP+) optical port, and the 1GE(SFP) optical port. Their default data rates are 100Gbps, 40Gbps, 10Gbps, 10Gbps, and 1000Mbps (or 1Gbps), respectively. Different optical ports should be connected with corresponding transceiver modules.

The interoperability, backward compatibility, and copper SFP compatibility differ from optical ports.

**Note:**

The above features of Hillstone optical ports require StoneOS 5.5R8 and later versions. Lower versions may need to be upgraded to 5.5R8 or later.

### *Interoperability*

Hillstone 100GE(QSFP28) optical ports and 40GE(QSFP+) optical ports can interoperate with 25G optical ports and 10G optical ports respectively via fiber break-out cables and 4-path transceiver modules with MPO connectors.

- **100GE(QSFP28) Optical Port**: The default data rate is 100Gbps. It can interoperate with 25G optical ports via fiber break-out cables and the 4-path TRAN-SR4-QSFP28 with MPO connectors. To interoperate with 25G optical ports, use the **channel-speed 25000** command in the optical port configuration mode.
- **40GE(QSFP+) Optical Port**: The default data rate is 40Gbps. It can interoperate with 10G optical ports via fiber break-out cables and the 4-path TRAN-SR-QSFP+ with MPO connectors. To interoperate with 10G optical ports, use the **channel-speed 10000** command in the optical port configuration mode.

  To restore the default data rate of the optical port, use the **no channel-speed** command in the optical port configuration mode.

Note:

- When a 100GE(QSFP28) optical port interoperates with 25G optical ports or a 40GE(QSFP+) optical port interoperates with 10G optical ports, its data rate cannot be backward switched.
- Delete optical port configuration before switching the data rate.
- Interoperability is not supported in SG-6000-A7600/A6800, and A-series expansion module IOC-A-2QSFP+.

### *Backward Compatibility*

Hillstone 100GE(QSFP28) optical ports and 10GE(SFP+) optical ports provide backward compatibility. **When the data rate is backward switched, the optical port should be inserted into the corresponding transceiver module. Note: 1GE(SFP) optical port does not support backward compatibility.**

- **100GE(QSFP28) Optical Port**: The default data rate is 100 Gbps, and can be backward switched to 40 Gbps. In the optical port configuration mode, use the **channel-speed 40000** command. When the data rate is backward switched, the optical port should be inserted into the 40GE(QSFP+) transceiver module and corresponding fibers.
- **10GE(SFP+) Optical Port**: The default data rate is 10 Gbps, and can be backward switched to 1 Gbps. When inserted into the 1GE(SFP) transceiver module, 10GE(SFP+) optical ports requires no extra operation if they can automatically switch their data rate to 1 Gbps. Otherwise, use the **channel-speed 1000** command in the optical port configuration mode.

To restore the default data rate, use the **no channel-speed** command in the optical port configuration mode.

Note:

- For 100GE(QSFP28):
  - When the data rate is backward switched, the 100GE(QSFP28) optical port cannot interoperate with 10G optical ports.
  - When a 100GE(QSFP28) optical port interoperates with 25G optical ports or a 40GE(QSFP+) optical port interoperates with 10G optical ports, its data rate cannot be backward switched.
  - The 2x40GE(QSFP+) (Ports 20-21) and 2x100GE(QSFP28) (Ports 22-23) optical interfaces of SG-6000-A7600/A6800 cannot be interoperated or backward switched by using the **channel-speed** command. You can use the **exec port-mode** command to switch to the 2x100GE(QSFP28)+2x40GE(QSFP+) or 4x100GE(QSFP28) mode. For more information, see Switching Mode.
- For 10GE(SFP+):
  - The 12*10G（SFP+） optical interfaces of Ports 8-19 of SG-6000-A7600/A6800 **do not support backward compatibility**.
  - The two SFP+ HA interfaces and SFP+ interfaces (Ports 26-29) of SG-6000-A5500/A5200/A5100 **do not support backward compatibility**.
  - The two SFP+ HA interfaces and SFP+ interfaces (Ports 26-29) of SG-6000-3900 **do not support backward compatibility**.

## Switching Mode

### *Switching Mode for A Series*

The 2x40GE(QSFP+) and 2x100GE(QSFP28) optical interfaces of SG-6000-A7600/A6800 can be switched to the following three modes through the **exec port-mode** command:

- **2x40GE(QSFP+)+2x100GE(QSFP28) mode**: The port 20 and 21 are in 40GE QSFP+ mode and the port 22 and 23 are in 100GE QSFP28 mode. This mode is the default mode.
- **2x100GE(QSFP28)+2x40GE(QSFP+) mode** : The port 20 and 21 are in 100GE QSFP28 mode and the port 22 and 23 are in 40GE QSFP+ mode.
- **4x100GE(QSFP28) mode**: Port 20-23 are in 100G QSFP28 mode.

To switch the mode, in any mode, use the following command:

**exec port-mode { 2x40G+2x100G | 2x100G+2x40G | 4x100G}**

- **2x40G+2x100G** - Switch to 2x40GE(QSFP+)+2x100GE(QSFP28) mode. This mode is the default mode.
- **2x100G+2x40G** - Switch to 2x100GE(QSFP28)+2x40GE(QSFP+) mode.
- **4x100G** - Switch to 4x100GE(QSFP28) mode.

## *Copper SFP Compatibility*

If an optical port supports a copper SFP module, it provides copper SFP compatibility. The model of Hillstone copper SFP is TRAN-GC. Only the 10GE(SFP+) optical port and the 1GE(SFP) optical port support copper SFP. Other Hillstone optical ports do not provide copper SFP compatibility even if they provide interoperability and backward compatibility.

- **10GE(SFP+) Optical Port**: Supports copper SFP module. When inserted into the copper SFP, 10GE(SFP+) optical ports require no extra operation if they can automatically switch their data rate to 1Gbps. Otherwise, use the **channel-speed 1000** command in the optical port configuration mode.
- **1GE(SFP) Optical Port**: Supports copper SFP module. You can insert the copper SFP directly.

To restore the default data rate, use the **no channel-speed** command in the optical port configuration mode.

Note:

- Delete optical port configuration before switching the data rate.

## Viewing Information about the Transceiver Modules

When an optical port is inserted into a transceiver module, use the **show transceiver** command to view information about this transceiver module, including SN, power, temperature, voltage, model, wavelength, max transmission distance, etc. Details are as follows:

After logging into the device via CLI, use the **show transceiver** command in any view, then you will see the below content:

```
SG-6000# show transceiver
Transceiver status information is shown as below:
================ xethernet0/6 ====================
SFP+/XFP information: FINISARCORP / FTLF8519P2BNL / 111230
Serial Number: PLT4PH9
Transmission media: Multi-mode
Module temperature: 32.38
Module temperature warning range:[-30.00 , 93.00 ]
Tx supply voltage: 3.34 V
Tx supply voltage warning range:[ 2.90 , 3.70 ]
Tx bias current: 5.59 mA
Tx bias current warning range:[2.00 , 14.00 ]
Tx optical power: -5.55 dBm
Tx optical power warning range:[-11.00 ,-2.00 ]
Rx optical power: -6.69 dBm
Rx optical power warning range:[-18.01 , -1.00 ]
Module Wavelength: 850.00 nm
single module max transmit distance: 0 km
OM1 max transmit distance: 150 m
OM2 max transmit distance: 300 m
```

```
OM3 max transmit distance: 0 m
copper max transmit distance: 0 m
================================================================
====
```

| Information | Description |
|---|---|
| Serial Number | Displays the serial number of the transceiver module. |
| Transmission media | Displays the transmission mode of the transceiver module, including Single-mode and Multi-mode. |
| Module temperature | Displays the current temperature of the transceiver module. |
| Module temperature warning range | Displays the temperature range of the transceiver module. |
| Tx supply voltage | Displays the transmit supply voltage of the transceiver module. |
| Tx supply voltage warning range | Displays the transmit supply voltage range of the transceiver module. |
| Tx bias current | Displays the transmit bias current of the transceiver module. |
| Tx bias current warning range | Displays the transmit bias current range of the transceiver module. |
| Tx optical power | Displays the transmit power of the transceiver module. |
| Tx optical | Displays the transmit power range of the transceiver module. |

| Information | Description |
| --- | --- |
| power warning range | |
| Rx optical power | Displays the receive power of the transceiver module. |
| Rx optical power warning range | Displays the receive power range of the transceiver module. |
| Module Wavelength | Displays the wavelength of the transceiver module. |
| single module max transmit distance | Display the max transmission distance of single mode. |
| OM1 max transmit distance | Display the max transmission distance of OM1 fiber. |
| OM2 max transmit distance | Display the max transmission distance of OM2 fiber. |
| OM3 max transmit distance | Display the max transmission distance of OM3 fiber. |
| copper max transmit dis- | Displays the max transmission distance of the copper cable. |

| Information | Description |
| --- | --- |
| tance | |

**Note:** Due to physical differences in hardware, some optical ports may fail to read information about the transceiver modules through this command.

# Chapter 2 Installation Preparations

## Introduction

This chapter introduces the preparations before installing the SG-6000 A-Series device, including the engineer requirements installation site environment requirements, cabinet and rack requirements, and unpacking. This chapter includes the following sections:

- Installation site environment requirements
- Cabinet requirements
- Rack requirements
- Verifying the parts received

## Installation Site Environment Requirements

The SG-6000A-Series device is designed for indoor use and the indoor environment should be a trusted location only available to the trusted employees . To ensure the normal operation and to prolong the service lifetime, the installation site must meet the requirements below.

### Temperature/Humidity Requirements

The ambient temperature and relative humidity in the installation site should be maintained at acceptable levels. The requirements are shown as below:

| Item | Requirements |
| --- | --- |
| Ambient Temperature | When the device is working, the requirement of SG-6000-A1605-A is between 0℃ and 45℃, for other devices, the requirement is between 0℃ and 40℃; When the device is being stored, the requirement is between -20℃ and 70℃. |
| Relative Humidity | For SG-6000-A1605-A, 5%-90%, non-condensing. For |

| Item | Requirements |
| --- | --- |
| | other devices, 10%-95%, non-condensing. |

## Clearness Requirements

It is required that there are no explosive, conductive, magnetic, and corrosive dusts in the installation site. The dust concentration requirement in the equipment room is shown as below:

| Mechanically Active Substance | Unit | Concentration |
| --- | --- | --- |
| Dust Particle | Particles/$m^3$ | $\leqslant 3\times10^4$ (No visible dust on tables within 3 days) |
| **Note**: Diameter of dust particle $\geqslant 5\mu m$ | | |

## ESD Prevention

To prevent electrostatic discharge (ESD) damage, ensure that:

- The device is well grounded. The grounding screw is properly grounded.
- Take dustproof measures for the equipment room.
- Maintain proper humidity and temperature levels.
- Do not disassemble the device without permission from the vendor, or you may cause danger and void your warranty.

## EMI Prevention

All possible Electromagnetic Interference (EMI) sources, external or internal, affect the device in the way of capacitance coupling, inductance coupling, electromagnetic radiation, and common impedance (including the grounding system) coupling. To prevent or reduce EMI:

- Take measures to protect the power system from the interference of the power grid.
- Separate the protection ground of the device from the grounding device or lighting protection grounding device of the power supply equipment as far as possible.
- Keep the device away from radio stations, radar, and other high-frequency and high-current devices.
- Use electromagnetic shielding when necessary.

### Grounding Requirements

To use the device more safely:

- Ensure that the grounding screw of the chassis is well grounded via the grounding cable.
- Ensure that the grounding pin of the power plug is well grounded.

## Cabinet Requirements

The SG-6000A-Series device (except desktop models) is designed to fit in a standard 19-inch cabinet. They can be installed in a 19-inch (or larger) cabinet.

### Cabinet Size and Clearance Requirements

The minimum size that can accommodate the device is a 19-inch standard cabinet. A larger cabinet can provide better air flow and reduce the chance of overheating.

To prevent overheating, the cabinet that accommodates the device should have certain clearance around the device.

### Cabinet Airflow Requirements

When a device is mounted in a cabinet, you must ensure that the ventilation through the cabinet conforms to the following requirements:

- Ensure that the ventilation of the cabinet itself is sufficient enough to dissipate the thermal output of the device.
- Ensure that the hot exhaust air will not be recirculated into the chassis.
- Route and dress all cables to minimize the blockage of airflow to and from the chassis.

## Rack Requirements

The SG-6000 A-Series desktop devices can be used without the need to be installed into a standard rack. If neccessary, they can be rack mounted by using a special tray (for A200/A200W/A200G4/A200WG4) or an auxiliary bracket (for A1100/A1000).

All other devices of the A-series can be installed into a 19-inch rack (four-post).

### Rack Size and Strength

The rack rails must be spaced widely enough to accommodate the chassis's external dimensions: 440.0 mm high, 515.0 mm deep and 88.4 mm wide. Ensure the rack is strong enough to hold the weight of the fully configured device.

### Rack Clearance Requirement

When planning the installation site, allow sufficient clearance around the rack for ventilation and maintenance.

- For better heat dissipation, the air flow around the chassis should not be blocked. Allow certain clearance between devices and between the side of the chassis and any non-heat-producing surface such as a wall.
- For personnel to operate the device (such as moving or installing hardware components), there must be adequate space around the chassis.

### Rack Mounting Requirements

Make sure the rack is secured to the structure of the building. If the geographical area is subject to earthquakes, bolt the rack to the floor. For maximum stability, you can secure the rack to the ceiling

brackets.

## Other Safety Recommendations

The directions below are also recommended for you to follow:

- Keep the device far away from moist areas and heat sources.
- Wear an ESD wrist strap correctly when handling the device.
- Be careful with laser emission. Do not directly stare into apertures of fiberoptic connectors that emit laser radiation.
- Use uninterrupted power supply (UPS).

## Verifying the Parts Received

When you receive the product, a packing list is included inside the accessory box. Verify the parts and items you received against the packing list. If any part is missing, contact a customer service representative.

Hillstone provides different expansion modules and power supply modules in separate individual packages according to your order.

## Installation Devices/Tools/Cables

The SG-6000A-Series device is shipped with a power cable and a console cable, and you should have the following items before the installation:

- Terminal: Configuration terminal (e.g. an ordinary PC).
- Tools: Cross screwdriver and ESD wrist strap/antistatic gloves.
- Cables: Power cable, console cable and Ethernet cable.

# Chapter 3 Installation

A yellow seal with dark ink characters is stuck on a mounting screw of the chassis. Keep the seal intact. The sales representative will check this seal before maintenance operation. Please get the permission of your sales representative before opening the chassis yourself. Warranty will be void if you disassemble the chassis without authorization.

Before installation, make sure that:

- You have read Chapter 2 Installation Preparations carefully.
- The requirements in Chapter 2 Installation Preparations are satisfied.

The SG-6000 A-Series device can be installed:

- On a workbench
- On a standard 19-inch rack

## Installing the Device on a Workbench

The SG-6000 A-Series device can be placed on a stable and clean workbench. For skid prevention, take the following steps to fit anti-skid pads on your device before installing:

- Step 1: Tear off the sticker from the rubber pad.
- Step 2: Press the sticky side of the pad to the right-angle die-pressed mark on the bottom panel of the chassis.

Figure: Installing the Rubber Pads

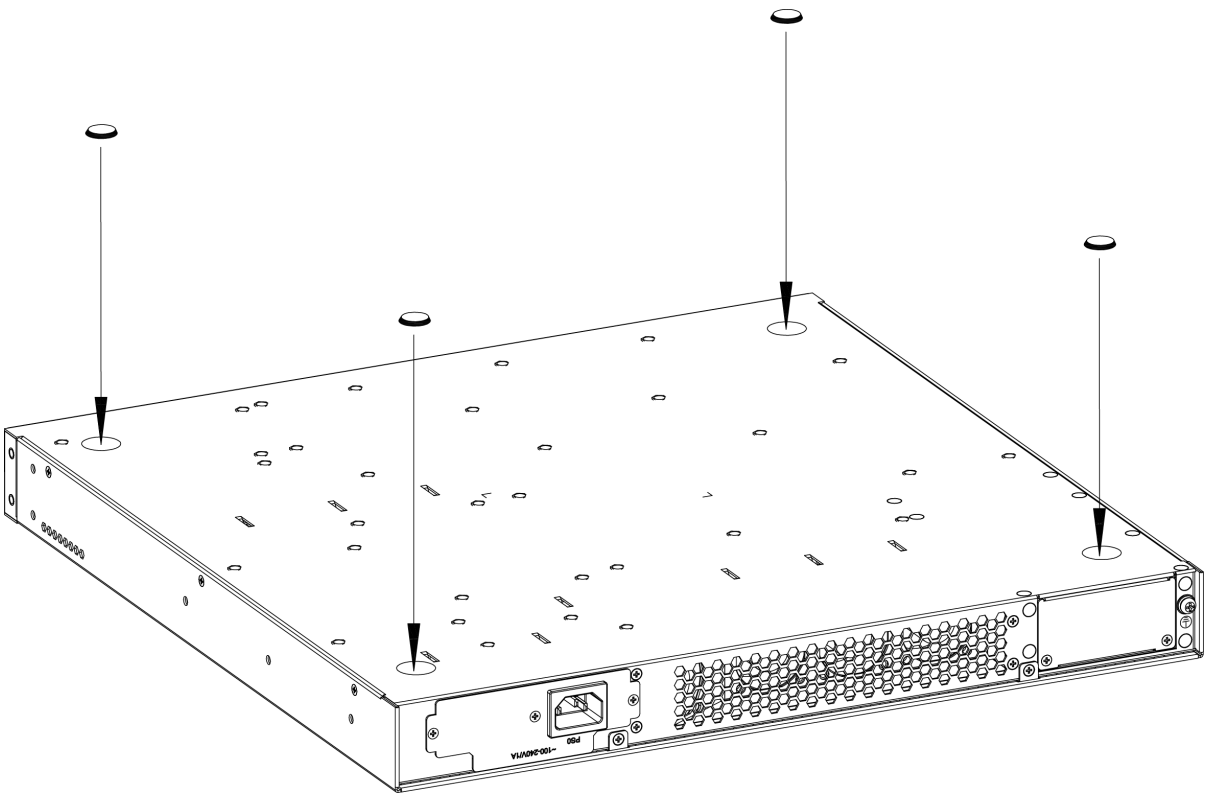

Check the following specifications when installing the device on a workbench:

- Make sure the workbench is stable and well grounded.
- Make sure the intake and the exhaust vents are unblocked, and keep the device well ventilated.
- Do not place any heavy object on the top of the chassis.

## Installing the Device on a Rack

To install your device on a standard rack, you can choose one of the following two methods: installing with a tray, auxiliary bracket, rack-mounting ears or installing with mounting rail assemblies. Due to differences in the installation environment and device weight, you should adjust the installation according to the actual situation.

### Installing with a Tray

If there is a tray on your rack, take the following steps:

1. Attach rack-mounting ears to the left and right side panels of the chassis respectively, and then fasten the rack-mounting ears with suitable screws.

*Figure: Installing the Rack-mounting Ears*

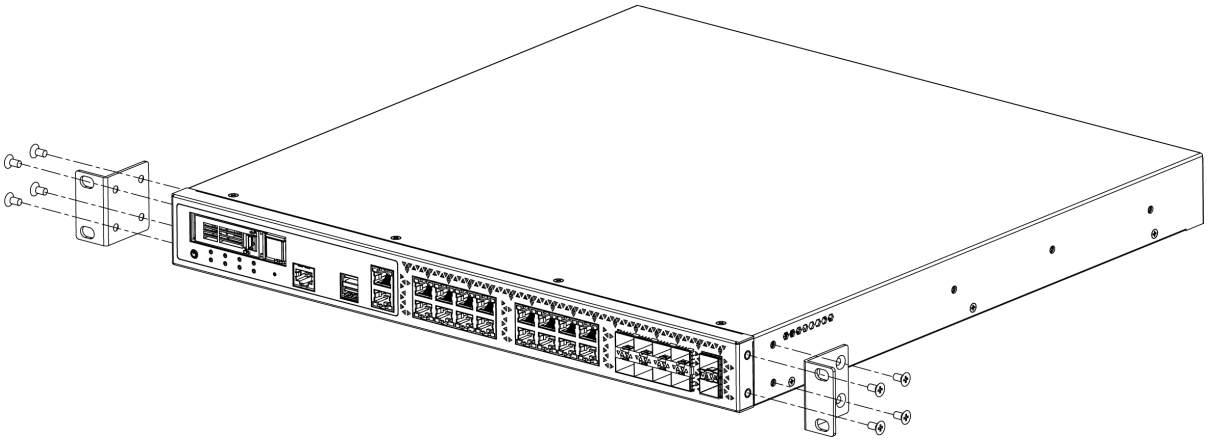

2. Mark the positions of rack-mounting ears on the front rack posts, and then install the floating nuts on the positions.

*Figure: Installing the Floating Nuts*

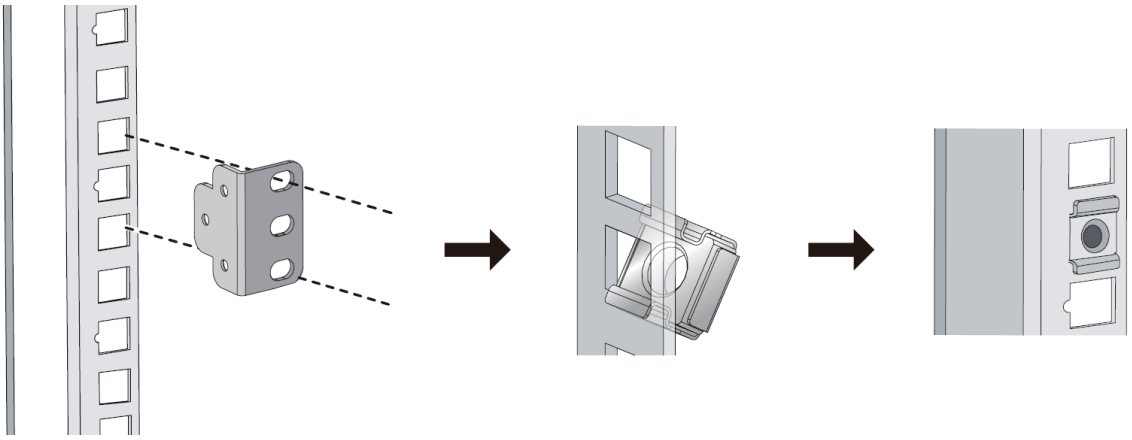

3. Two people are needed to safely raise the device and place it on the tray of the rack, and ensure rack-mounting ears of the device fit closely with the front rack posts.

4. Keep the center of the rack-mounting ear and the center of the rack hole horizontally even and tighten the screws.

*Figure: Installing the Device on a Rack*

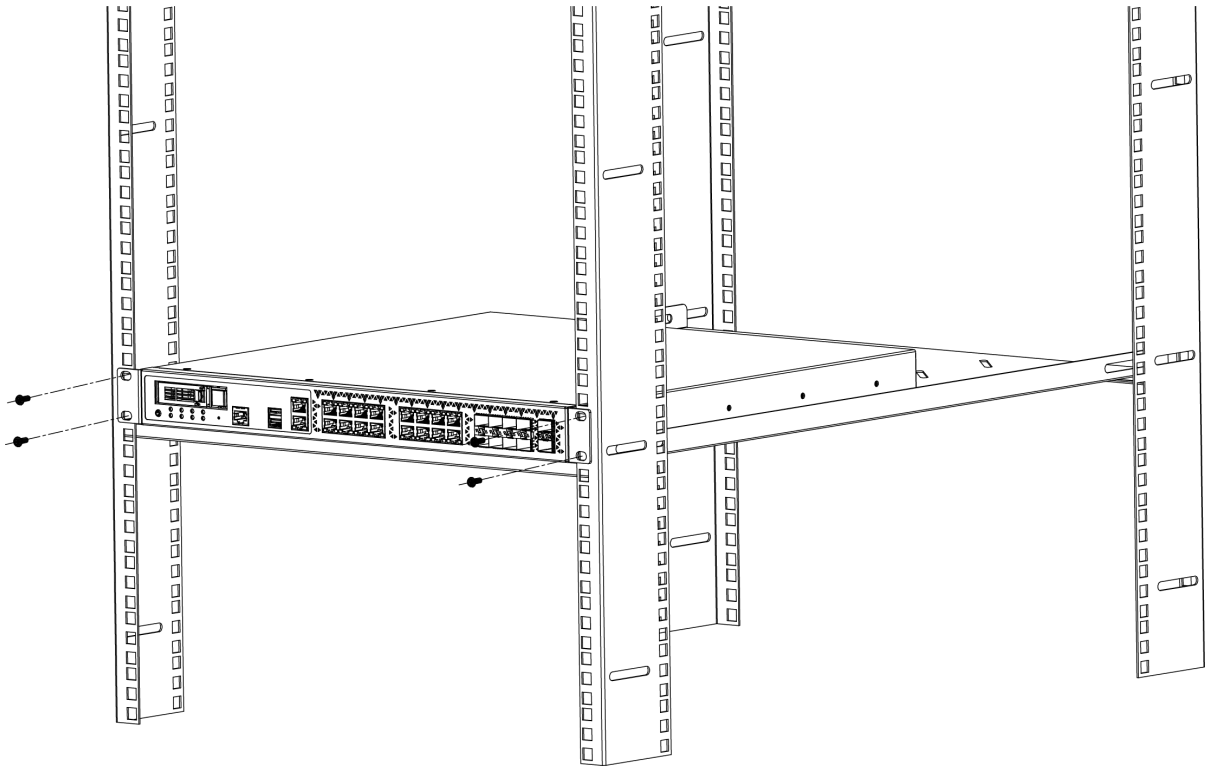

To install a desktop device (A200/A200W/A200G4/A200WG4) into a standard rack, purchase a special tray from Hillstone.

To install your device on a standard rack, take the following steps:

1. Mark the positions of tray on the front rack posts, and then install the floating nuts on the positions.
2. Place the device on the rack, and ensure the tray of the device fit closely with the front rack posts.
3. Place the device into the tray and push the device forward while pressing it down until the device snaps into the catch on the tray.

*Figure: Installing the Device on a Standard Rack*

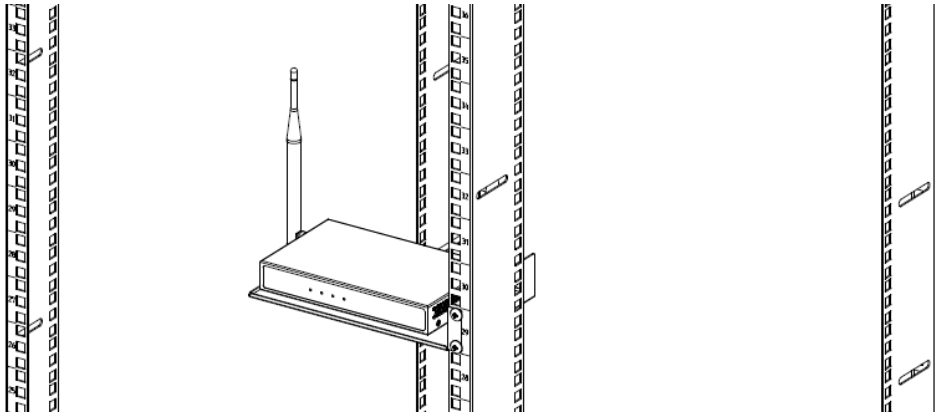

## Installing with Auxiliary Bracket

To install a desktop device (A1100/A1000) into a standard rack, purchase auxiliary brackets from Hillstone.

To install your device on a standard rack, take the following steps:

1. Attach auxiliary brackets to the left and right side panels of the chassis respectively, and then fasten the auxiliary brackets with suitable screws.
2. Mark the positions of auxiliary brackets on the front rack posts, and then install the floating nuts on the positions.
3. Place the device on the rack, and ensure the auxiliary brackets of the device fit closely with the front rack posts.
4. Keep the center of the auxiliary brackets and the center of the rack hole horizontally even and tighten the screws.

*Figure: Installing the Device with Auxiliary Bracket*

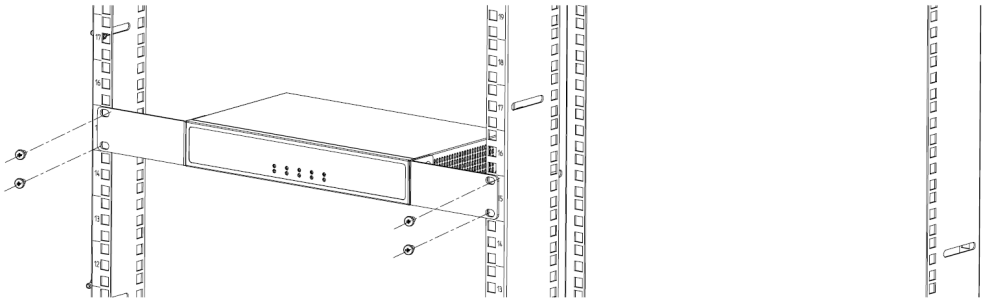

**Note:** The installed device cannot bear weight!

## Installing with Rack-Mounting Ears

To install SG-6000-A1605-A device on a standard rack, please use the rack-mounting ears in the packaging box for installation.

To install your device on the standard rack with the rack-mounting ears, take the following steps:

1. Align the rack-mounting ears with the holes on both sides of the chassis, and secure each using 4 rack-mounting ears screws.

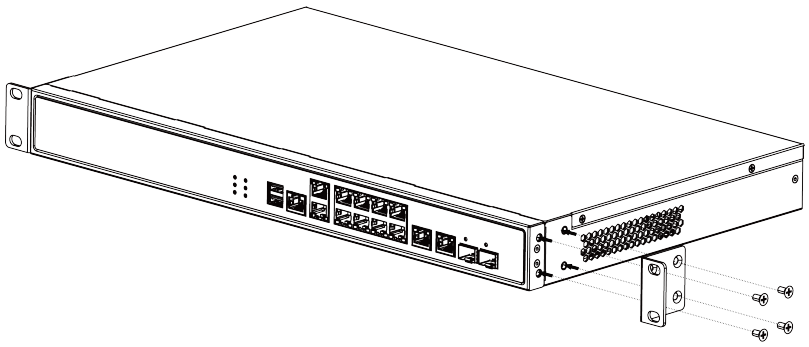

2. Mark the positions of rack-mounting ears on the front uprights of the rack, and install the floating nuts in the two marked screw holes on the rack.

3. Use the mounting screw to align the screw holes of the rack-mounting ears with the centers of the floating nuts in the cabinet square holes, and tighten the screws.

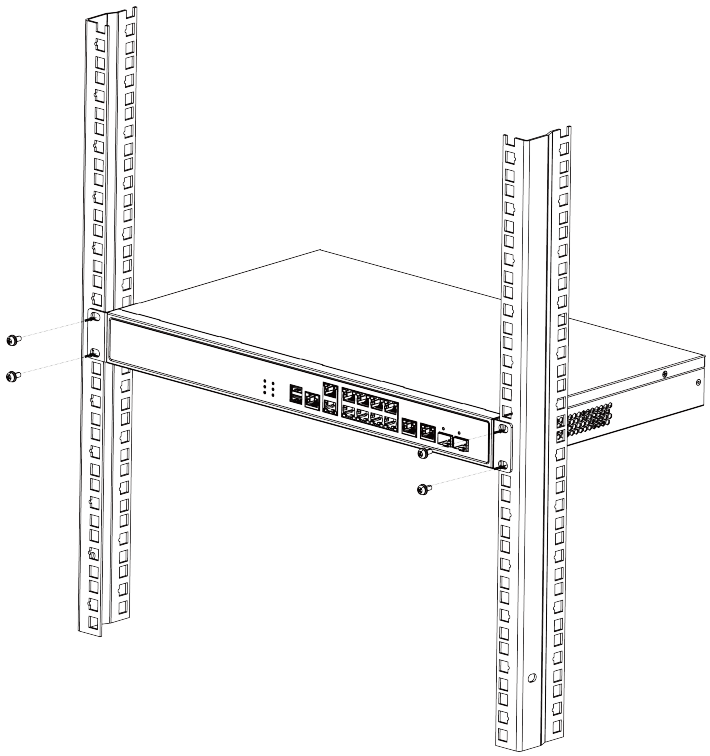

## Installing with Mounting Rail Assemblies

> **Note:** The rack-mounting ears cannot bear weight. If there is no tray or other holder on your rack, contact Hillstone for purchasing mounting rail assemblies.

The rack-mounting rail is used to hold the device and bear weight. The rail varies depending on the device model. Please refer to the installation steps based on the rack-mounting rail style described in the figure below.

As shown in the following figure, the rack-mounting rail is designed for 19-inch racks, with a height of 1U.

*Figure: Mounting Rail Assembly*

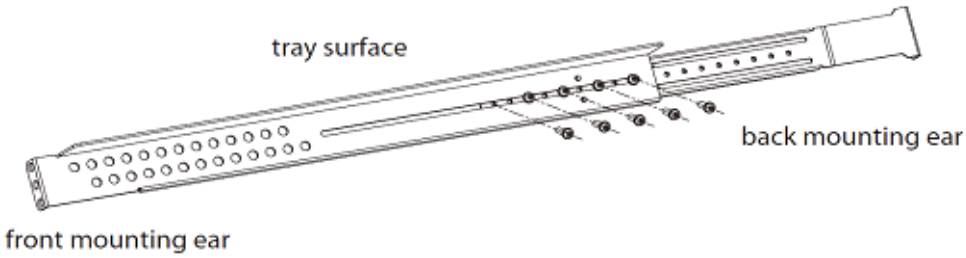


To install your device on the standard rack with the rack-mounting rail, take the following steps:

1. Hold the mounting rail assembly and shift the tray surface upwards. In the desired position, hook the front mounting ear onto the front rack post.
2. Keep the mounting rail assembly horizontal and adjust the length of it until the back mounting ear can hook the back rack post. Mark the positions of squared holes on the front and back rack posts.
3. Use the cross screwdriver to tighten the screws in the mounting rail assembly until the rail cannot slide. Five screws are provided; arrange the position of these screws on average according to the length of the mounting rail assembly.

   *Figure: Mounting Rail Assembly*

   
4. Move the mounting rail assembly aside. Install the floating nuts in the marked squared holes.
5. Move the mounting rail assembly back, and keep the center of the rack-mounting ear and the center of the rack hole horizontally even and tighten the screws.
6. Repeat the above steps to install the mounting rail assembly on the other side. The tray surface should be upward, and the two mounting rail assemblies should be at the same horizontal surface.

*Figure: Installing the Mounting Rail Assemblies*

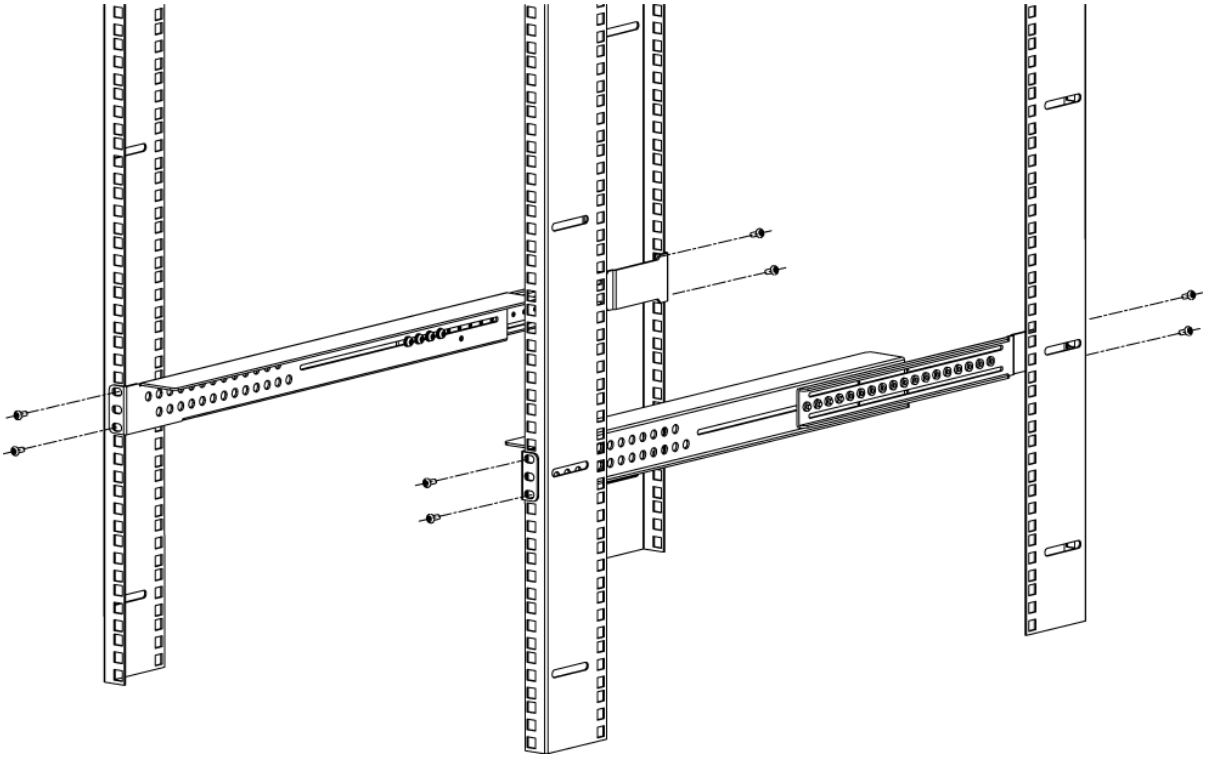

7. Mark the positions of rack-mounting ears on the rack and then install the floating nuts on the positions.

*Figure: Installing the Floating Nuts*

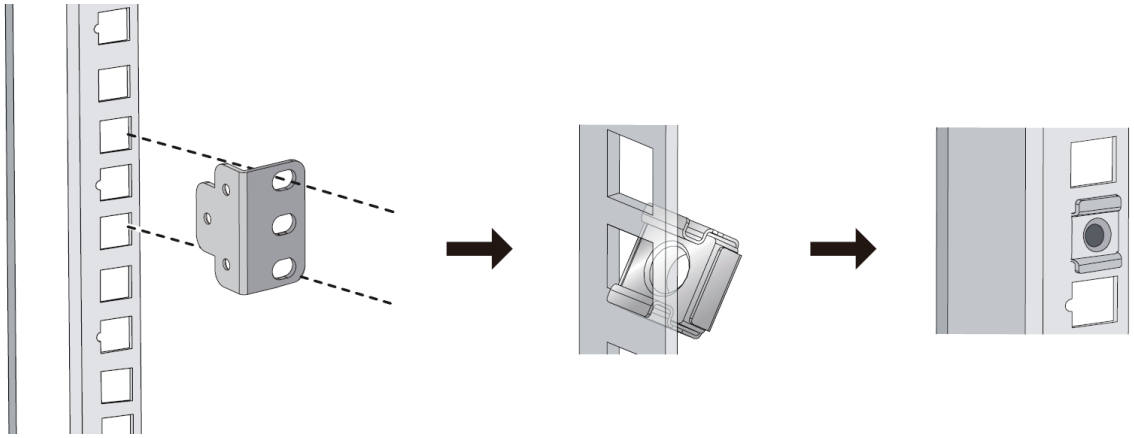

8. Attach rack-mounting ears to the left and right side panels of the chassis respectively, and then fasten the rack-mounting ears with suitable screws.

9. Two people are needed to safely raise the device and place it on the mounting rail assemblies on the rack (or use the lift to place the device on the mounting rail assemblies on the rack).

10. Keep the center of the rack-mounting ear and the center of the rack hole horizontally even and tighten the screws.

Ashown in the following figure, the rack-mounting rail is composed of the moving part and guiding part. It is designed for 19-inch racks without occupying additional rack space.

*Figure: Complete Mounting Assembly*

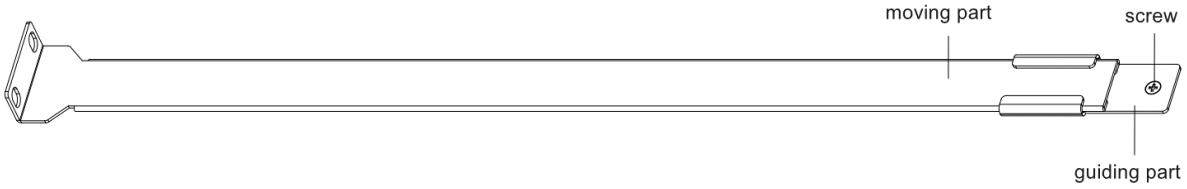


*Figure: Moving Part Assembly*

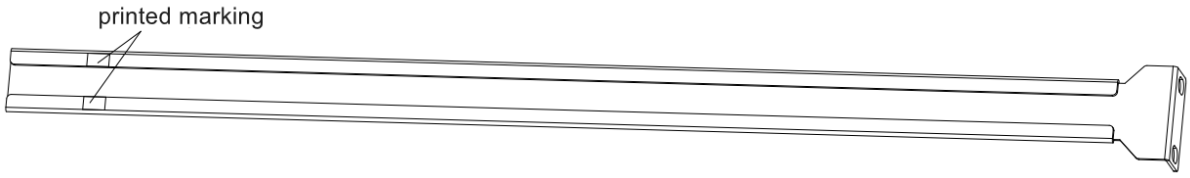


**Note:** The rack-mounting rail included in the package is designed to fit standard racks with a depth of 600mm. For racks with other depths, if the white rectangular marking on the moving part is obstructed after installation, it can still be adapted. If the marking is not obstructed, contact Hillstone for purchasing compatible rails.

To install the device on the standard rack by using the rack-mounting rail, take the following steps:

1. Install the mounting ears to the rear of the chassis on both sides (near the front panel) using screws and install the guiding part to the rear of the chassis.

2. Mark the position of the front mounting ear on the front upright of the rack and secure the square nut in the rack’ s screw hole from the inside to the outside.

*Figure: Installing the Floating Nuts*

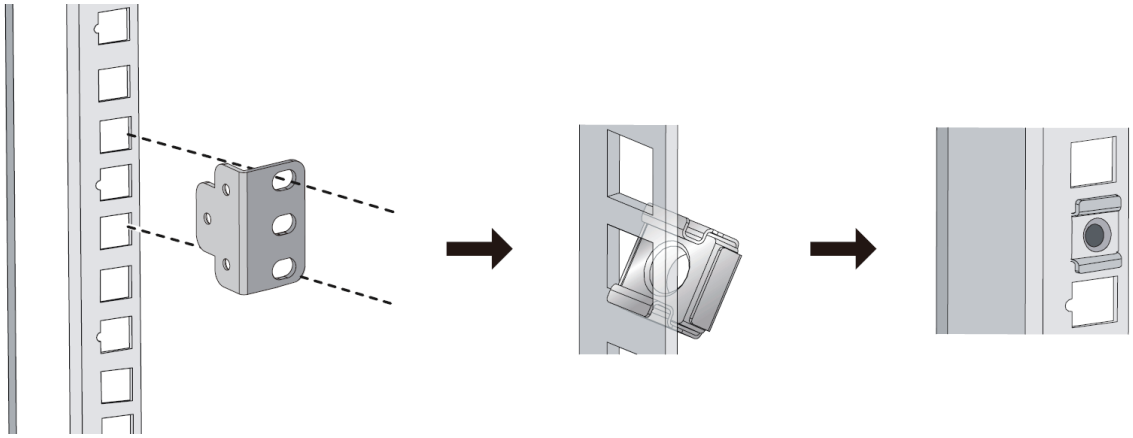

3. Two people lift the device and place it into the rack. Slowly push it backward until the front mounting ear is flush against the front upright.

4. Align the center of the front mounting ear hole with the center of the floating nut inside the square hole on the rack, and tighten the mounting screw.

*Figure: Installing the Mounting Rail Assemblies*

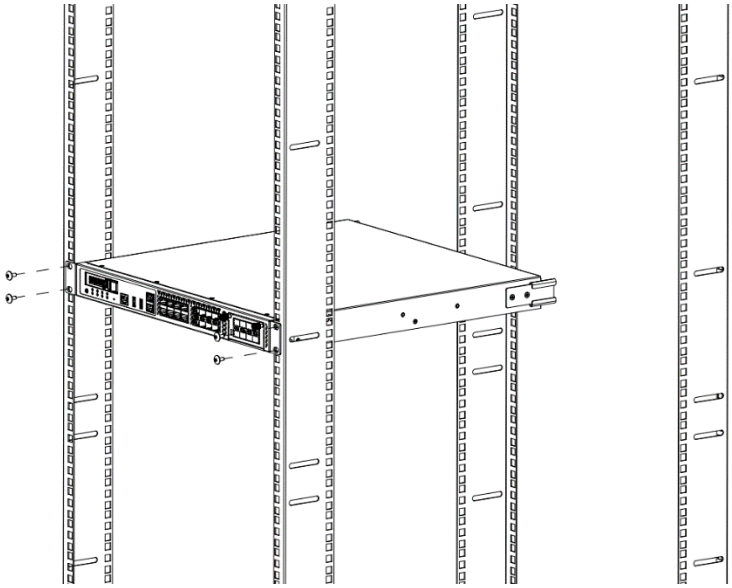

5. Horizontally insert the moving part into the guiding part until the two white rectangular printed markings on the moving part are completely covered.

*Figure: Installing the Mounting Rail Assemblies*

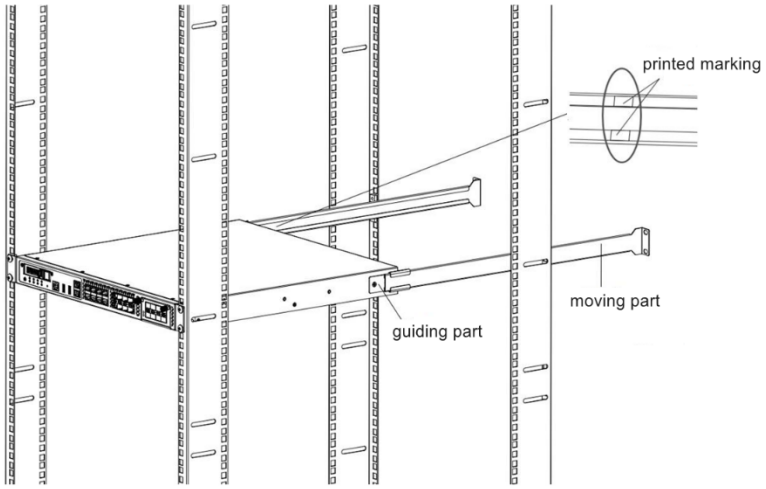


6. Use the mounting screw to align the center of the circular hole on the moving part with the center of the square hole on the rack where the floating nut is located. Tighten the screw to secure the moving part to the rack.

*Figure: Installing the Mounting Rail Assemblies*

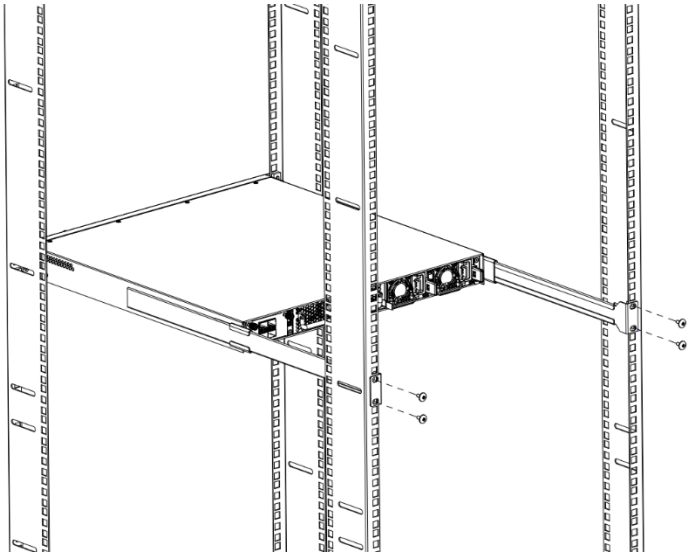

**Note:** During steps 3 to 6, the installation personnel needs to securely hold the device throughout the process. It is recommended to have at least two personnel working together for the installation.

# Connecting Cables

This section describes how to connect cables to the device, including connecting the grounding cable, the console cable, the Ethernet cable and the power cable.

## Connecting the Grounding Cable

To meet safety requirements, you should correctly connect the grounding screw on the chassis to the earth ground by a grounding cable. The grounding resistance should be less than 5 Ω.

*Figure: Connecting the Grounding Cable (1U Chassis as example)*

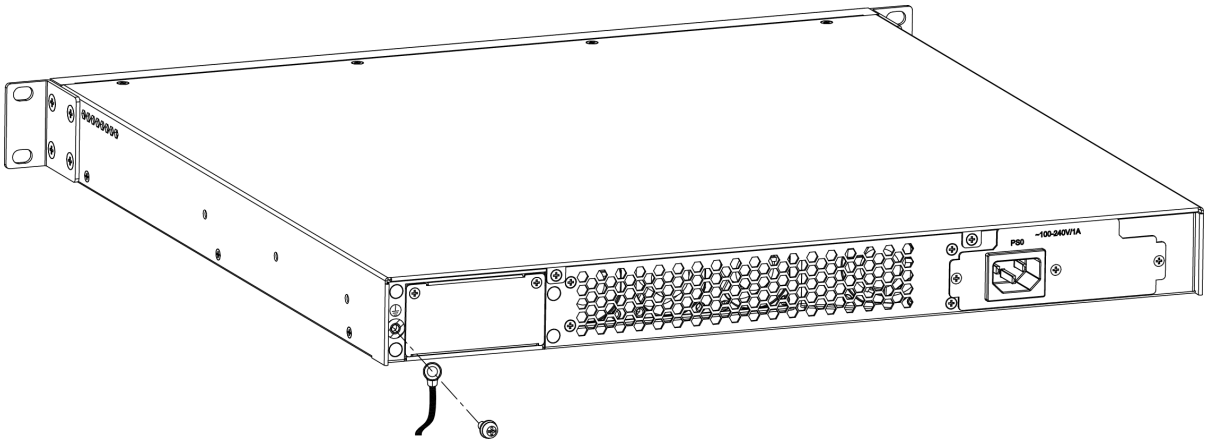

**Note:** Correctly connecting the grounding cable is crucial to electrostatic protection and electromagnetic interference protection. To avoid damage to the device, you should properly connect the grounding cable when installing and using the device.

## Connecting the Console Cable

The SG-6000 A-Series device provides an RS-232C asynchronous serial console (CON) port, through which you can configure the device. The console cable is an 8-core shielded cable, which has an RJ-45 connector that can be connected to the Console port of the device and a DB-9 (female) connector that can be connected to the serial port of a console terminal.

To connect the device and the console terminal, take the following steps:

1. Select a console terminal. You may choose an ordinary PC or a standard ASCII terminal with an RS-232C serial port.

2. Connect the console cable. Connect the RJ-45 end of the console cable to the device's Console port (labeled CON), and then connect the DB-9 end to the console terminal.

## Connecting the Ethernet Cable

The SG-6000 A-Series device provides gigabit Ethernet ports, SFP ports, and SFP+ ports. The gigabit Ethernet port can be connected by a straight-through cable (also called standard cable) or crossover cable. The SFP port supports both an SFP optical module connected by a single-mode or multi-mode optical fiber, and an SFP copper module connected by a crossover cable or straight-through cable.

All SFP Port and SFP+ Port optical modules use LC-type optical connectors; therefore, you should connect the optical modules using optical fibers with LC-type connectors. All optical modules are hot-swappable.

### *Connecting the Ethernet Copper Cable*

Follow the guidelines below when connecting cables to the ports:

- Be careful not to connect the Ethernet port to the wrong ports. Read the label above the port carefully.

- For electrical Ethernet connection, use a crossover cable or straight-through cable.

### *Connecting the Ethernet Fiber Cable*

Follow the guidelines below when connecting cables to the ports:

- Be careful not to connect the Ethernet port to the wrong ports. Read the label above the port carefully.

- For SFP port connection, insert the SFP optical module into the SFP port before connecting the LC-type connector to the optical module.
- For XFP port connection, insert the XFP optical module into the XFP port before connecting the LC-type connector to the optical module.
- Keep the followings in mind when connecting fiber cables:
- The curvature radius should be greater than 10cm. Avoid excessive bending of the cable.
- Ensure the Tx and Rx ends are connected correctly.
- Keep the connector of the optical cable clean.

**Note:** Laser danger! To protect your eyes from radiation harm, do not stare into a cable connector connected to a laser generator.

## Connecting an AC Power Cable

The AC power cable is shipped with the chassis. Prepare a single-phase three-terminal power socket with a ground contact in advance. Normally, the ground contact of the power supply system in a building was buried during construction and cabling. Before connecting the AC input power cable, make sure that the power socket is well grounded. To connect the AC power cable, take the following steps:

1. Make sure the grounding cable is reliably connected to the earth ground.
2. Connect the AC power socket of the power source using the AC power cable. To connect more AC power cables, repeat this step.
3. After being connected to the power supply by the power cord for the first time, the device will automatically start up.
4. Check if the PWR LED on the front panel is on. A solid green LED indicates correct connection.

Figure: Connecting an AC Power Cable

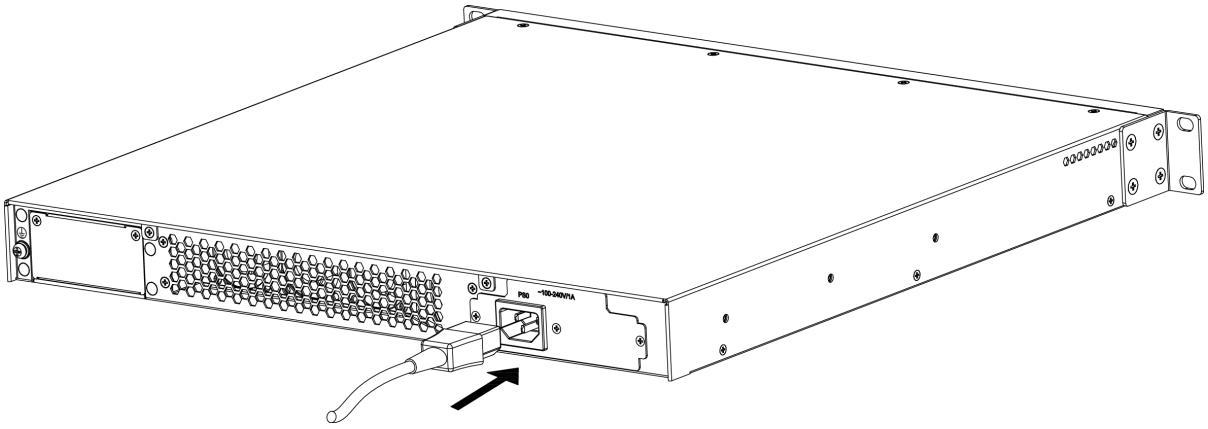

## Connecting a DC Power Cable

To power the device with a DC power source, use DC power cables to connect the device and the external DC power source.

**Note:** Before connecting a DC power cable, ensure that the cable is not connected to any power source and make sure the cable will not be powered during the process.

To connect the DC power cable, take the following steps:

1. Ensure that the power source voltage is in accordance with required voltage specified in System Parameters.
2. Switch off the power source.
3. If a terminal on the power supply module has a plastic cover, remove the cover and keep it.
4. Connect the grounding screw (labeled with " ⏚ ") to the ground contact point using a grounding cable.

5. For a DC cable with a connector, plug the connector end to the DC power interface.

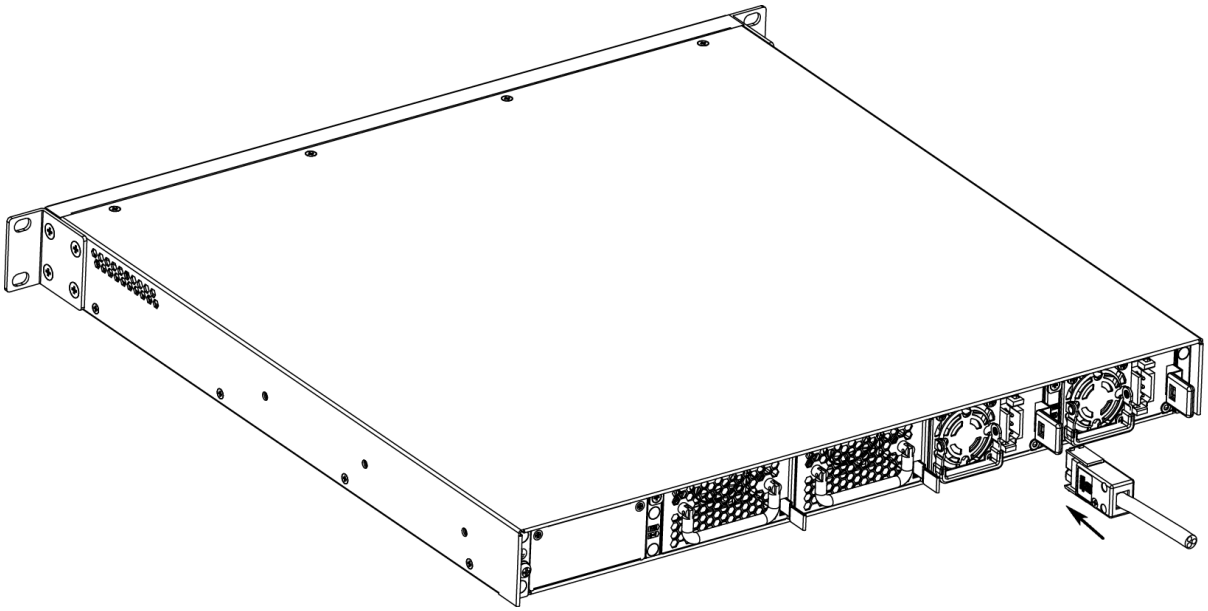

6. For DC cables without connectors, use the cables to connect the "+" terminal of the device to the "+" terminal of the power source, and "-" terminal to the "-" terminal of the source.

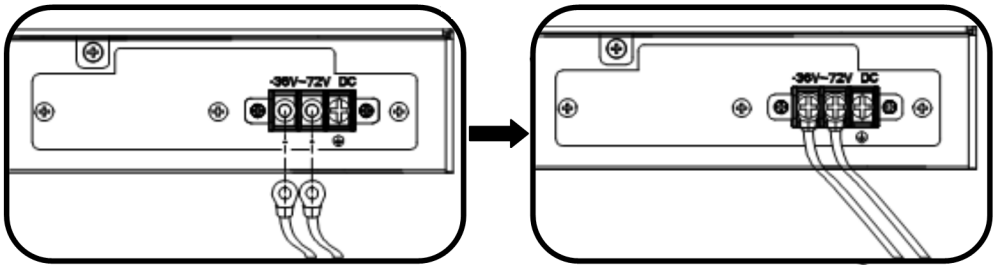


7. Verify the connection is correct and fasten the cables using the cross screwdriver.
8. Replace the plastic cover(s) removed in Step 3 over the terminal(s).
9. To connect more DC power cables, repeat Steps 3 to 7.
10. Switch on the power source, and then the device will automatically start up.
11. Check if the PWR LED on the front panel is on. A solid green LED indicates correct connection.

### Connecting a Power Adapter

For some models, you need to connect the device to the external AC power supply by using the power adapter to power the device:

To connect a power adapter, take the following steps:

1. Insert the DC output plug of the power adapter into the DC power interface on the back panel of the device.

2. Connect the power adapter to the external AC power supply.

### Installing the Antenna

For devices that support the WIFI function and are installed with WIFI antennas, you need to rotate the antennas through 90 degrees, as shown below.

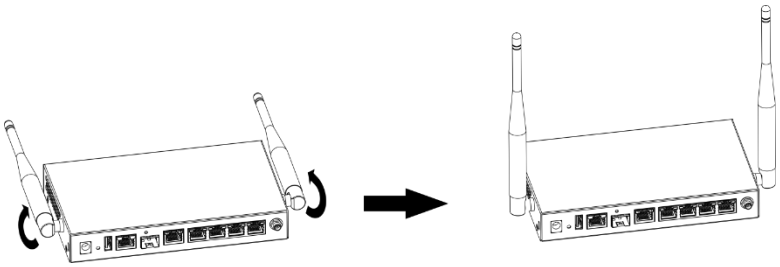

## Verifying Installation

After you complete the installation with all the above steps, you still need to verify the following items.

- All the cables are properly connected.
- The grounding cable of the device is correctly connected.
- The air vents on both side panel of the device are unblocked, and there is enough space around for heat dissipation.
- The expansion modules, power supply modules and fan tray are correctly installed (for some products).

- The power source meets the requirements of the device.
- If the device is rack-mounted, make sure the rack is stable enough. If the device is placed on a workbench, make sure the workbench is stable and clean.

# Chapter 4 Boot and Configuration

## Introduction

This chapter describes how to perform initial system boot and basic configuration of the Hillstone SG-6000 A-Series device, using a PC as the console terminal.

## Startup

After being connected to the power supply by the power cord for the first time, the device will automatically start up. If the device is shut down by pressing the power button or using the shutdown command, and the power cord has not been disconnected after shutdown, you can press the power button to power on the device. After that, check if the PWR LED on the front panel is on. A solid green LED indicates correct connection.

> **Note:** For SG-6000-A200/A200W, switching on and off can be directly controlled by plug-in power supply.

## Establishing a Configuration Environment

The SG-6000 A-Series device supports both local and remote configuration. Administrators can use the following configuration methods.

- Console (CON) connection
- WebUI
- Telnet or SSH

### Console (CON) Connection

For initial system configuration, you have to establish a Console connection environment (connect the device to a configuration terminal through its Console port). To connect the PC to the CON port of the device, take following steps:

1. Set up a local configuration environment. Connect the Console port to the serial port of a PC through a console cable, as shown in the figure below:

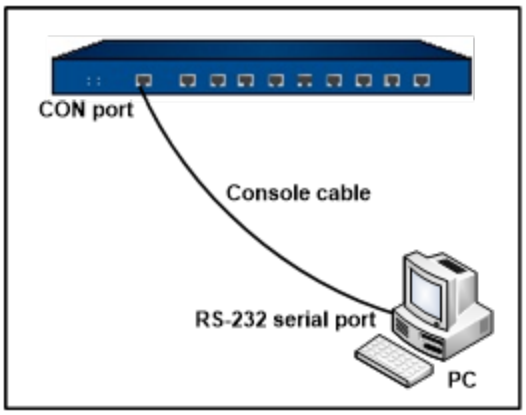


2. Run the terminal emulation program on the PC (e.g. hyper terminal of Windows XP/Windows 2000) to set up a connection. Set the parameters of the terminal session to 115200bps, 8 data bits, 1 stop bit, none parity, and none flow control, as shown in the figure below:

3. Switch on the power supply, and the device performs self-test and initializes the configuration automatically. If the booting succeeds, the system will display the command line prompt "login". Enter the default administrator name and password "hillstone" at the "login" and "password" prompts, press Enter. And now you are successfully logged in and accessing the CLI. After login, please change the default password of the device in time.

4. Enter commands to configure or view running status. Enter a question mark "?" to get help on commands whenever you want.

## WebUI

The MGT port has a default IP address of 192.168.1.1/24, and all the management functions of this port are enabled by default. Administrators can access the WebUI through the MGT port.

To log in the device's WebUI, take the following steps:

1. Set up the IP address of the management PC on the same subnet as **192.168.1.1/24**. Connect the management PC to the MGT interface through an Ethernet cable.

- If the device has a MGT interface, connect the cable to this interface.
- If the device does not have a MGT interface, connect the cable to the e0/0 interface.

2. Launch a Web browser of the management PC, enter the URL **https://192.168.1.1** in the address bar, and then press Enter.
3. Type the default administrator name (hillstone) and password (hillstone) into the text boxes respectively.
4. At the first sign of address, you need to read and accept the EULA (End User License Agreement). Click **EULA** to view the details of the EULA.
5. Click **Login** to enter the home page. After login, please change the default password of the device in time. Then you can set other configurations to the device.

**Note:** Upon first logging into the device with the specified role, the default password needs to be changed. For more information about password settings and role permissions, see **Managing Device** in *StoneOS WebUI User Guide*.

### Telnet or SSH

You can also establish Telnet and SSH configuration environments. For more information, see *StoneOS CLI User Guide*.

## Basic Configuration

Before beginning to use the device, you should be familiar with its features and your network deployment. Different device positions in the network, network management demands and network security designs require different topology designs, working modes, security zones, and policy configurations. The basic configurations may include:

- Create security zones, including the link layer (L2) and network layer (L3). Bind different interfaces to correct security zones respectively.

- Assign IP addresses to interfaces.
- Configure the management functions of the interfaces and create the security policy rules.
- Assign proper network addresses and configure the NAT rules as needed.
- Configure routing of the system to ensure the network connectivity.
- Configure security policy rules between security zones.
- Configure network parameters, such as DHCP and DNS agent, etc.

**Note:** For more information on protocols and configurations, see *StoneOS CLI User Guide* and *StoneOS WebUI User Guide*.

## Connecting to Internet by Using Routing Mode

In routing mode, the device is deployed as a gateway to connect the internal network to the internet. This topic provides an example based on a topology, describing how to configure a new device to allow internal network users to access the internet via routing mode. Network connectivity in routing mode can be implemented by using the following methods:

- **Using PPPoE Dial-Up**: The firewall device is configured as the PPPoE client, establishing a connection with the ISP's (Internet Service Provider) PPPoE server. The PPPoE server assigns a dynamic IP address to the firewall device, enabling internet access.
- **Using a static IP**: The firewall device connects to the internet by using a static IP address provided by the ISP.

## Via PPPoE Dial-up Mode

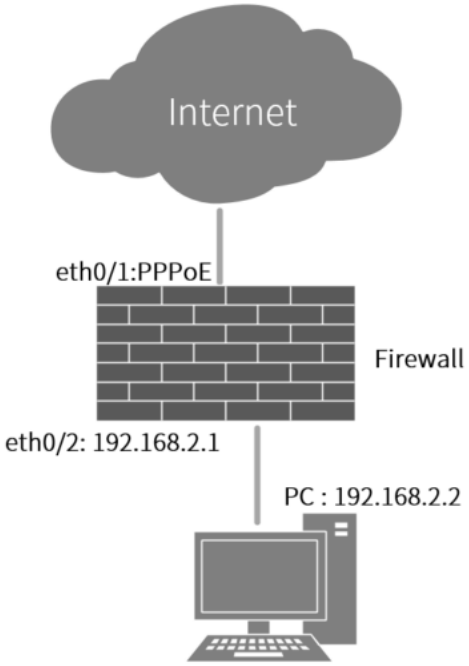


1. Access a deviec via WebUI.

2. Configure the interfaces. Click **Network** > **Interface**, and double-click the interface ethernet0/1 to confiure the following options.

| Option | Value |
|---|---|
| **Basic** | |
| Interface | ethernet0/1 |
| Binding Zone | Layer 3 Zone |
| Zone | untrust |
| **IP Configuration** | |
| Type | PPPoE |
| User Name | Enter the PPPoE user name provided by the operator |
| Password | Enter the PPPoE password provided by the operator |
| Conform Pass- | Enter the password again to confirm. |

| Option | Value |
| --- | --- |
| word | |
| others | Keep the default values or configure as required |

3. Bind the interface ethernet0/2 to the trust zone and configure the IP address 192.168.2.1/24.

4. Configure the source NAT rules to convert the intranet IP into an interface IP. Select **Policy** > **NAT** > **SNAT**, and click **New** to configure the following options .

| Option | Value |
| --- | --- |
| **Requirements** | |
| Source Address | Address Entry, Any |
| Destination Address | Address Entry, Any |
| Egress | Egress interface, ethernet0/1 |
| **Translated to** | |
| Translated | Click the **Egress IF IP** radio button |
| Sticky | Select the Enable check box |

5. Configure a Security Policy Rule. Select **Policy** > **Security Policy** > **Policy**, and click **New** to configure the following options.

| Options | Value |
| --- | --- |
| **Source Information** | |
| Zone | trust |
| Address | Any |
| **Destination** | |
| Zone | untrust |

| Options | Value |
|---|---|
| Address | Any |
| Service | Any |
| Application | Configure it with the default value, i.e. no application is limited. You can select a specific application according to your need. |
| Action | Permit |

6. Configure the IP address, gateway and DNS for the PC. The IP address should be in the same segment of ethernet0/2, and DNS should be specified as the public DNS.

## Via Static IP addresses

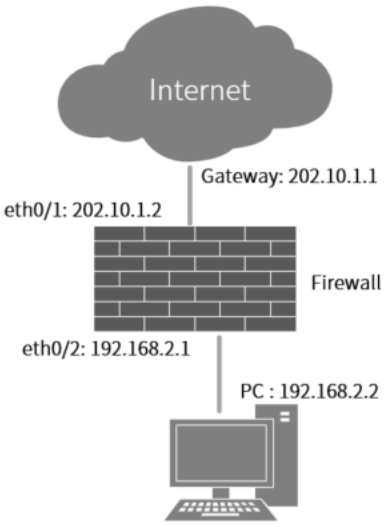


1. Configure the interfaces. Click **Network** > **Interface**, and double-click the interface ethernet0/1 to confiure the following options.

| Option | Value |
|---|---|
| **Basic** | |
| Interface | ethernet0/1 |
| Binding Zone | Layer 3 Zone |

| Option | Value |
|---|---|
| Zone | untrust |
| **IP Configuration** | |
| Type | Static IP |
| IP Address | 202.10.1.2 |
| Net Mask | 255.255.255.0 |
| Routing | |
| Reverse Route | Enable |

2. Bind the interface ethernet0/2 to the trust zone and configure the IP address 192.168.2.1/24.

3. Configure the SNAT rule to translate the internal IP to the egress interface IP. Click **Policy** > **NAT** > **SNAT**, and click **New** to configure the policy as below.

| Option | Value |
|---|---|
| **Requirements** | |
| Source Address | Address Entry, Any |
| Destination Address | Address Entry, Any |
| Egress | Egress interface, ethernet0/1 |
| **Translated to** | |
| Translated | Click the **Egress IF IP** radio button |
| Sticky | Select the Enable check box |

4. Configure a Security Policy Rule. Select **Policy** > **Security Policy** > **Policy**, and click **New** to configure the following options.

| Options | Value |
|---|---|
| **Source Information** | |
| Zone | trust |
| Address | Any |
| **Destination** | |
| Zone | untrust |
| Address | Any |
| Service | Any |
| Application | Configure it with the default value, i.e. no application is limited. You can select a specific application according to your need. |
| Action | Permit |

5. Configure a default route. Select Network > Routing > Destination Route, and Click New to configure the route as below.

| Option | Option |
|---|---|
| Destination | 0.0.0.0 |
| Subnet Mask | 0.0.0.0 |
| Next Hop | Click the Gateway radio button |
| Gateway | 202.10.1.1 |

6. Configure the IP address, gateway and DNS for the PC. The IP address should be in the same segment of ethernet0/2, and DNS should be specified as the public DNS.

## Creating a Wireless Network for Access

After connecting to the Internet, for the devices supporting WIFI function, intranet users can access the device wirelessly, and then access the Internet through the device. To creating WLAN, take the following steps:

1. Configure WLAN. Click **WLAN** on the navigation pane to visit the WLAN page. In the WLAN page, click **New**. Configure the WLAN as below.

| Option | Value |
|---|---|
| SSID | Test |
| WLAN Interface | Wlan0/1 |
| SSID Broadcast | Select the Enable check box |
| Security Mode | WPA-WPA2-PSK |
| Data Encryption | CCMP |
| Pre-shared Key | Enter the value of the pre-shared key |

2. Configure the WLAN interface and DHCP. Click Network on the navigation pane to visit the Network page.Select the interface **wlan0/1**, and click the **Edit** button. Configure the interface as below:

| Option | Value |
|---|---|
| Basic | |
| Interface Name | wlan0/1 |
| Binding Zone | Layer 3 Zone |
| Zone | trust |
| IP Configuration | |
| Type | Static IP |
| IP Address | 1.1.1.1 |
| Net Mask | 255.255.255.0 |

| Option | Value |
| --- | --- |
| Advanced | |
| Reverse Route | Enable |

3. Click **DHCP** > **DHCP Server**, and configure the DHCP server as below.

| Option | Value |
| --- | --- |
| DHCP Configuration | |
| Gateway | 1.1.1.1 |
| Netmask | 255.255.255.0 |
| DNS1 | Specify it with the real public DNS, such as 172.8.8.8. |
| Address Pool | |
| Start IP | 1.1.1.2 |
| End IP | 1.1.1.200 |

4. Intranet users can access the Internet by connecting to the "Test" wireless network.

## Shutdown

The shutdown methods vary based on different models. If you want to shut down your device, take one of the following methods: by removing the power cable, by using the power button, and by using the shutdown command.

**Note:**

- Before shutting down, please save the data first.
- Do not shut down the device by removing the power cord forcibly if this method is not supported. Otherwise, database corruption or historical data loss may occur, resulting in failing to access the device.

### By Removing the Power Cable

> **Note:** Only SG-6000-A200/A200W/A200G4B model devices support this method.

If you stop using SG-6000-A200/A200W/A200G4B devices, please remove the power cord and shut them down after saving the data.

### By Using the Power Button

> **Note:** This method supports devices of other models except SG-6000-A200/A200W/A200G4B.

Long press the power button of other models for about 5 seconds. When the blue power button indicator is off, system is shut down and the power cord can be removed.

### By Using the Shutdown Command

> **Note:** This method supports devices of other models except SG-6000-A200/A200W/A200G4B.

To shut down the device by using the shutdown command, take the following steps:

1. After logging into the CLI (command line interface), in the execution mode, enter the shutdown command. The command is as follows.

```
SG-6000# shutdown
System configuration has been modified. Save? [y]/n: y
(Type the letter "y" and press Enter)
Building configuration.2019-09-04 07:44:46, Event
CRIT@MGMT: admin save system configuration via Con-
sole.
Saving configuration is finished
```

```
Are you sure to shut down the device? y/[n] : y (Type
the letter "y" and the system shuts down. Type the let-
ter "n" or press Enter to go back to the execution
mode. )
2019-09-04 07:44:58, Event CRIT@MGMT: admin shut down
the device via Console.
```

2. Enter the letter "y" after "Are you sure to shut down the device? y/[n]/ n:" and press Enter, system will start to shut down.

3. When the blue power button indicator is off, system is shut down and the power cord can be removed.

# Chapter 5 Hardware Maintenance and Replacement

## Introduction

This chapter explains how to install and remove power supply modules, expansion modules, fan trays, of the Hillstone SG-6000 A-Series device,.

## Installing and Removing the Power Supply Module

This section describes how to install and remove the removable power supply module of SG-6000-A7600/A6800/A5800/A5600/A5555/A5500/A5255/A5200/A5155/A5100/A3800.

To install a power supply module, take the following steps:

1. Ensure that the power supply module to be used is not connected to any power source.
2. Face the back panel of the device.
3. If the power supply slot is covered by a blank plate, remove the plate first (unscrew the screws on the blank plate and take it down). Skip this step if the slot is not covered.
4. Even out the outline of the power module and the outline of the power slot. Slide the power module straight into the slot until it is fully seated in the chassis slot. You can hear a click of the lock being stuck in the chassis. Verify that the panel of the power module and the chassis panel are at the same horizontal level.

Figure: Installing a Power Supply Module

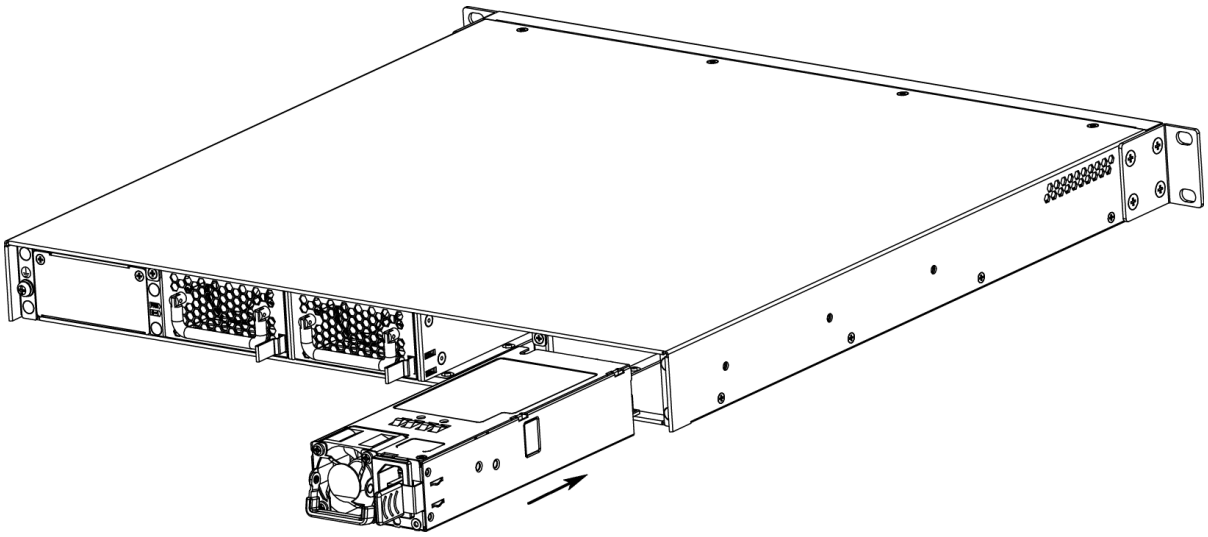

To remove the power supply module, take the following steps:

1. Ensure that the power supply module to be used is not connected to any power source.
2. Face the back panel of the device.
3. Pull the power module straight out of the chassis by pressing the lever and holding the provided handle.

## Installing and Removing the Expansion Module

> **Note:** The expansion module is not hot-swappable. Make sure the device is powered off and disconnected when installing and removing the expansion module.

The general expansion slot on the back panel of SG-6000-A7600/A6800/A5800/A5600/A5555/A5500/A5255/A5200/A5155/A5100/A3800/A3700 can accommodate interface modules and Bypass modules. For more information on expansion modules, see Expansion Modules.

To install an expansion module, take the following steps:

1. Make sure the power is switched off and you are wearing the ESD strap and the antistatic gloves properly.
2. Face the front panel of the device.
3. Use a screwdriver to remove the blank plate from the expansion slot.
4. Even out the outline of the expansion module and the outline of the expansion slot. Slide the expansion module into the slot until there is resistance.
5. Tighten the screws on the expansion module.

Figure 9-1 *Figure: Installing an Extension Module*

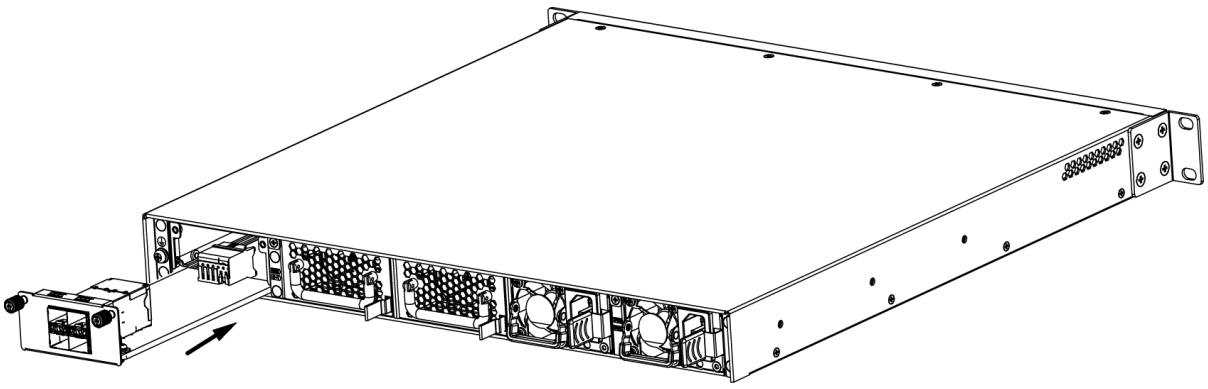

To remove an expansion module, take the following steps:

1. Make sure the power is switched off and you are wearing the ESD strap and the antistatic gloves properly.
2. Face the front panel of the device.
3. Loosen the screws on the expansion module.
4. Pull the expansion module straight out of the chassis by holding the screws.

**Note:** Place a blank plate over the slot where no expansion module is installed.

## Installing and Removing the Fan Tray

Only the SG-6000-A7600/A6800/A5800/A5600/A5555/A5500/A5255/A5200/A5155/A5100/A3800 supports removable fan trays, and the fan trays are hot-swappable.

To install a fan tray, take the following steps:

1. Hold the provided handle on the fan tray, and even out the outline of the fan tray and the outline of the fan tray slot.
2. Slide the fan tray into the slot until there is resistance.

Figure: Installing a Fan Tray

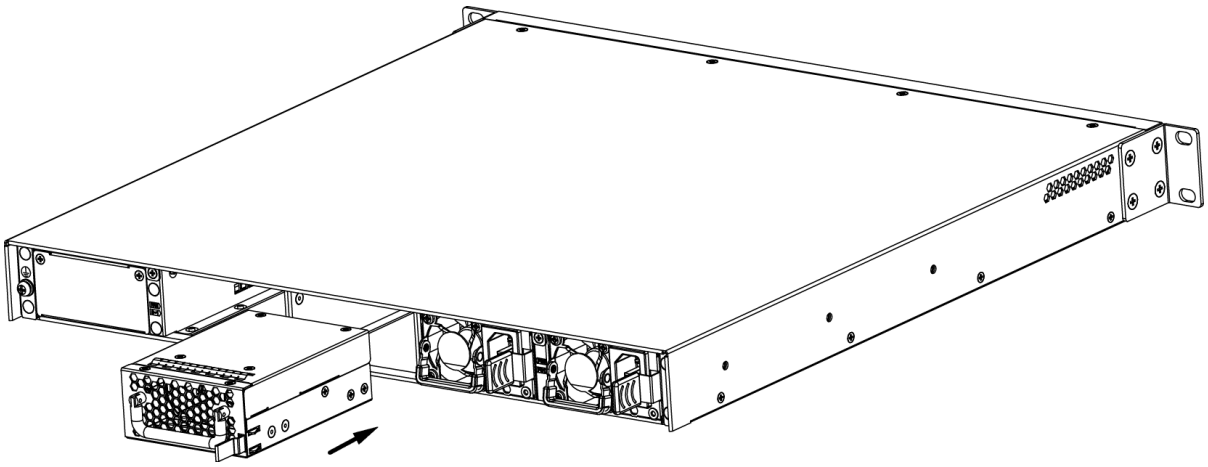

**Note:** Check if the FAN LED is on after the device is powered on. A solid green LED indicates that the fan is functioning normally.

To remove a fan tray, take the following steps:

1. Hold the provided handle on the fan tray.
2. Pull the fan tray straight out of the chassis.

**Note:** To avoid over-heating, insert a replacement fan tray immediately after removing the existing one.

## Installing/Removing/Replacing the SSD

The SSD on the A-Series device is removable.

**Note:** Before installing, removing or replacing an SSD, make sure the power is switched off and you are wearing the antistatic gloves properly.

### Installing an SSD

SG-6000-A7600/A6800/A5800/A5600/A5555/A5500/A5255/A5200/A5155/A5100/A3800/A3700/A3600/A3000/A2800/A2700/A2600/A2000 can accommodate a SSD, which is installed into the SSD expansion slot on the front panel.

To install an SSD, take the following steps:

1. Power off the device.
2. Face the front panel of the device.
3. Toggle the red button on the SSD expansion slot to the unlocked state , press the black button next to it, and then the expansion slot cover will open automatically.
4. Hold the slot cover and keep it vertical to the front panel, and then pull the disk enclosure straight out of the chassis.
5. Put the SSD into the disk enclosure, align the screw holes on left and right sides of the SSD with the holes on the disk enclosure, and tighten the screws on both sides (2 on each side).

*Figure: Installing an SSD*

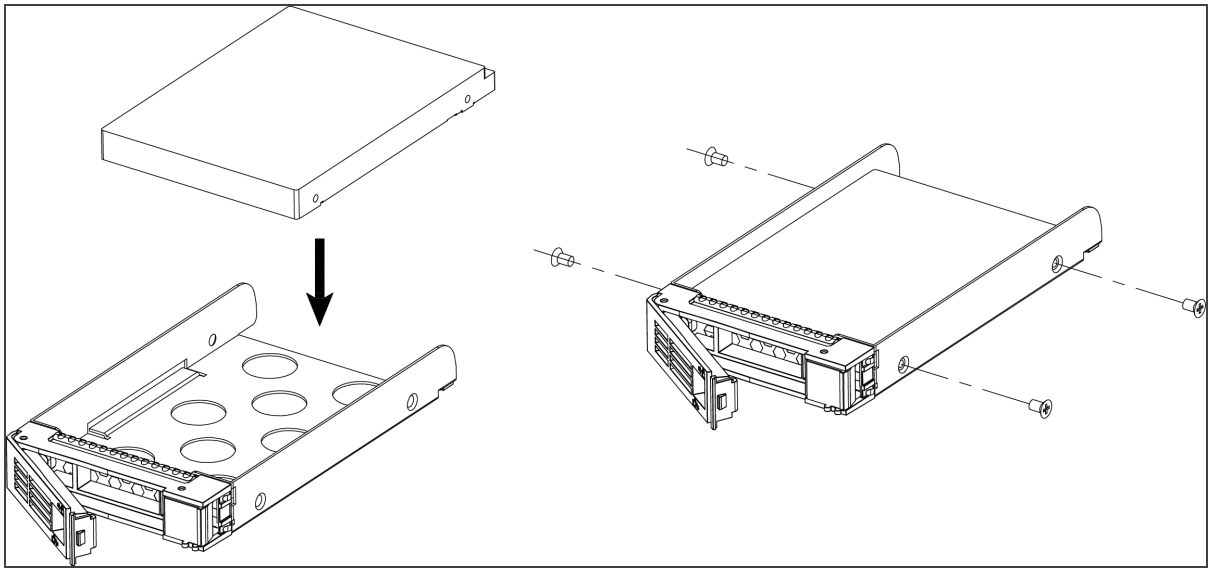

**Note:** When installing a Hillstone hard disk, you need to use the special screws included in the package.

6. Align the hard disk tray with the edge of the hard disk expansion slot as shown in the figure, then slowly push the hard disk inside the main unit of the device until it reaches the bottom.

   Figure: SSD installation into the device

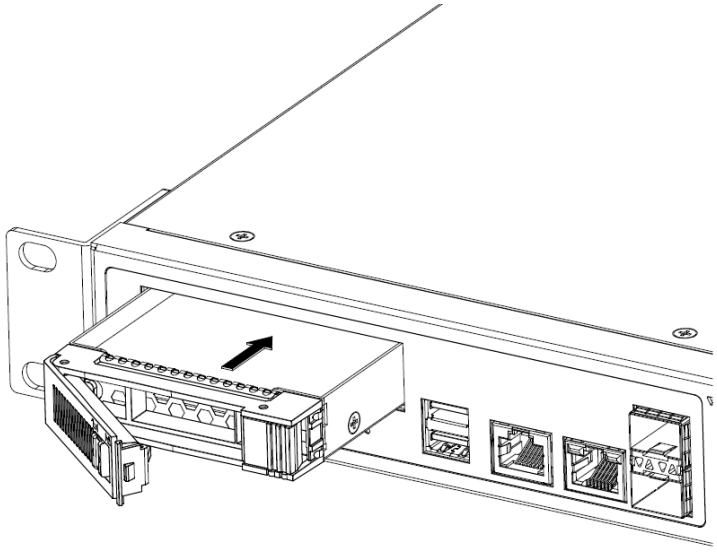

7. Close the slot cover, and toggle the red button to the locked state 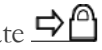.

8. Power on the device.

SG-6000-A1100 and SG-6000-A1000 can accommodate a SSD, which is installed into the SSD expansion slot at the bottom of the device.

To install an SSD, take the following steps:

1. Power off the device.
2. Face the bottom panel of the device, loosen the two screws (indicated by arrows 1 and 2 in the figure) on the expansion slot cover, and then remove the cover.
3. With the component side of the SSD up, insert the SSD into the slot at an angle, and then press it to make it even.
4. Tighten the screw on the non-connecting-finger end of the SSD to secure the SSD.
5. Check whether the SSD is installed evenly.
6. Put the slot cover back on the slot, and tighten the two screws removed in Step 1.
7. Power on the device.

Figure 9-2 *Figure: Installing an SSD*

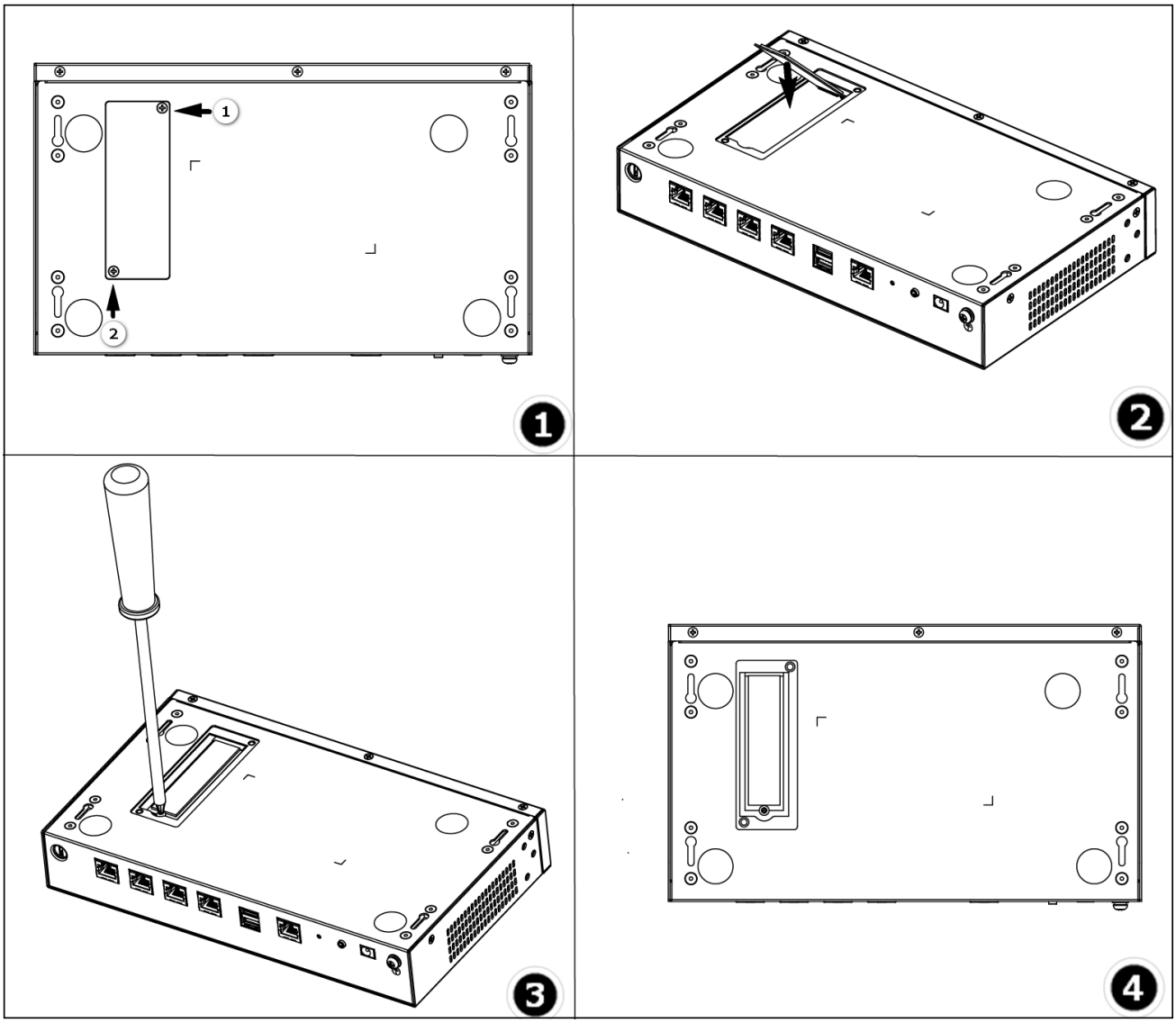


## Removing an SSD

For SG-6000-A7600/A6800/A5800/A5600/A5555/A5500/A5255/A5200/A5155/A5100/A3800/A3700/A3600/A3000/A2800/A2700/A2600/A2000, to remove an SSD, take following steps:

1. Power off the device.

2. Face the front panel of the device.

3. Toggle the red button on the SSD expansion slot to the unlocked state , press the black button next to it, and then the expansion slot cover will open automatically.
4. Hold the slot cover and keep it vertical to the front panel, and then pull the disk enclosure straight out of the chassis.
5. Unscrew the screws on both sides of the disk enclosure, and remove the SSD.
6. Slide the disk enclosure into the slot, close the slot cover, and toggle the red button to the locked state .

For SG-6000-A1100 and SG-6000-A1000, to remove an SSD, take the following steps:

1. Power off the device.
2. Face the bottom panel of the device, loosen the two screws on the expansion slot cover, and then remove the cover.
3. Loosen the screw used to secure the SSD.
4. Pinch the end of the SSD where the screw has just been removed, and gently pull the SSD out at an angle.
5. Put the slot cover back on the slot, and tighten the two screws removed in Step 1.

## Replacing an SSD

To replace an SSD, take the following steps:

1. Power off the device.
2. Remove the installed SSD of the device. For specific steps, see Removing an SSD.
3. Install the new SSD for the device. For specific steps, see Installing an SSD.
4. Power on the device. After logging in to the CLI, in execution mode, user the command **exec database reset**.

5. Reset the database and restart the device according to the system prompts, and patiently wait for the restart to complete.

# Chapter 6 Troubleshooting

## Introduction

This chapter provides solutions to some common problems of the Hillstone SG-6000 A-Series device.

## Losing the Administrator Password

If you lose the administrator password, please contact your local sales representative or you can reset the system to restore its factory password.

System resetting restores its factory default settings and all your configurations will be lost.

## Troubleshooting Expansion Modules

When an expansion module malfunctions, take the following steps to troubleshoot:

- Make sure the module is in the correct slot and properly installed.
- When the device is powered on, check the module LEDs and identify its problem according to the Expansion Module LED Descriptions table.
- Make sure the StoneOS version you are using is compatible with the module.
- Make sure you have installed a license that supports the module.
- Use the command **show module** to view the status of all modules on the command line interface. If the system returns no slot information after this command is entered, the module must have an error.

If you have performed all the above troubleshooting steps but still cannot identify its problem, please contact your local sales representative.

**Note:** For the expansion module LED information, see "Interface Modules" on Page 224.

## Troubleshooting the Cooling System

Only applicable to the new-series devices, including SG-6000-5500, SG-6000-3900, SG-6000-3500, SG-6000-2700, SG-6000-2300, SG-6000-2100, SG-6000-1900, SG-6000-1200, and .

A malfunctioning fan/fan tray can influence the ventilation through the chassis. When the system is over heated, it will shut itself down.

When the cooling system malfunctions, take the following steps to troubleshoot:

- Use the command **`show environment`** to view the chassis temperature and fan spinning speed.
- Check the fan LED. When the fans are running normally, the LED is solid green; when it is red, one or more fans fail, and you should replace the fan/fan tray immediately to prevent over-heating of the system. See "Installing and Removing the Fan Tray" on Page 328.

## Troubleshooting the Power System

Check the PWR LED on the front panel of the device. If the power supply is functioning normally, the PWR LED is solid green. If the LED is off, take the following steps to troubleshoot:

- Make sure the power supply cable is connected correctly.
- Ensure that the voltage of the power source conforms to the required voltage.

For the PWR LED information, see LED Indicators for each model of devices LED Indicators.

## Troubleshooting the Configuration System

The Console configuration terminal shows system booting message when the device is powered on. If the configuration system has failed, it displays error information or nothing at all.

If the configuration terminal shows no information, take the following steps to troubleshoot:

- Make sure the power supply is correctly connected and powered on.
- Verify the Console cable is connected properly.
- Ensure the terminal configuration settings are correct.

If above steps reveal no error, the Console cable may be broken.

# Change Log

## Version 2.0

Overview of changes in this version:

**Content structure optimization**: for **Product Introduction** Chapter reconstruction, dividing product details of each model into independent chapters for easy retrieval and positioning.

**Interactive upgrade of reading methods**: Introducing tab style navigation to optimize user browsing experience and achieve quick switching and access to content.

**Unified visual style**: Updated interface colors and styles to achieve more harmonious and professional visual effects.

**Add Power cables Chapter**: Expanded content, including detailed schematic diagrams and specification parameters of AC and DC power lines, to facilitate users to understand and choose in detail.

**Add Optical module Chapter**: Provide a detailed introduction to all adaptive optical modules used in conjunction with A-series firewalls. Including precautions for using optical modules, adaptation system versions, detailed schematic diagrams and specification specifications for different types and models of optical modules, providing comprehensive technical support for users to choose adaptive optical modules.

## Version 1.0

This version covers the product introduction, installation, startup and configuration, hardware maintenance, and common troubleshooting of all released A-series firewall platforms.

Models include SG-6000 A-Series product models include SG-6000-A7600, SG-6000-A6800,SG-6000-A5800, SG-6000-A5600, SG-6000-A5555, SG-6000-A5500, SG-6000-A5255, SG-6000-A5200, SG-6000-A5155, SG-6000-A5100, SG-6000-A3815, SG-6000-A3800, SG-6000-A3700, SG-6000-A3615, SG-6000-A3600, SG-6000-A3000, SG-6000-A2815, SG-6000-A2800, SG-6000-A2715, SG-6000-A2700, SG-6000-A2600, SG-6000-A2000, SG-6000-A1100, SG-6000-A1000, SG-6000-A200W , SG-6000-A200 and SG-6000-A200G4B.

# Appendix: Supported Versions of Devices

During the production process, components of part SG-6000 A series devices have been updated, which may cause the incompatibility among software versions. The tables below display the devices of which the components have updated. Check whether your device is in the following tables. If it is, it's strongly recommended you update the device to the suggested versions in reference of the device production batch and usage of the module .

**Note:**

- The devices which are not listed in the following table can update normally.
- If the SN of the device in the Table 1 is outside the range, it can update normally.
- You can find the production batch of the device according to the SN.

Table 1: Supported Versions of Devices

| Device Model | Device SN Range | Supported Versions |
| --- | --- | --- |
| SG-6000-A3800/A3700 /A3600/A3000 | When the SN of the device meets any of the following conditions, it needs to be upgraded to the corresponding supported version:<br>• The number composed of the 6th and 7th digits is greater than or equal to **51**, and the number composed of the 8th and 9th digits is equal to **21**;<br>• The number of the 8th and | 5.5R8P5 and later P versions<br>5.5R8F5 and later F versions 5.5R8P5M1 and later M versions |

| Device Model | Device SN Range | Supported Versions |
| --- | --- | --- |
| | 9th digits is greater than 21.<br><br>For example, the SN is "xxxxx5221xxxxxxx", the 6th and 7th bits comprise 52, and the 8th and 9th bits comprise 21, which meets the first condition, so it needs to be upgraded to the corresponding supported version. | |