SW0605HIPOE-GF-DC

UPS Solar PoE Ethernet Switch

1GE 60W PoE + 2GE 30W PoE + 2GE Auto PoE + 1GE SFP



Overview

Having the features that power generation by solar energy, intelligent PoE power supply and control on auto charging and discharging, 5+1 high-power solar energy charging switch can more effectively solve the network application and power supply demand in complicated environments such as in remote mountainous areas, scenic spots, network electricity off shore and outdoor construction.

Features

- Auto charging and discharging
- Battery voltage auto detection
- Support lead-acid and lithium battery (MAX 50AH)
- Support 12V/24V solar panel input (MAX 400W)
- Intelligent PSE chip
- PoE standard: IEEE802.3af/at/PoE++
- High-power output (first port can output Hi-PoE, MAX 60W)
- 4-5 port 24V/48V adaptive output
- REALTEK intelligent CPU chip

Specifications

Part No.	SW0605HIPOE-GF-DC
Product	5+1 High-power Solar Energy PoE Switch
Port	1*10/100/1000Base-TX 60W PoE port (Data/Power） 2*10/100/1000Base-TX 30W PoE port (Data/power) 2*10/100/1000Base-TX Auto PoE port (Data/power) 1*1000M SFP
PoE Port	1port: Ai version Hi-PoE, port output power MAX 60W 2-3port: IEEE 802.3af/at, port output power MAX 30W 4-5port: Auto AI version PoE port (supply power for 48V/24V devices), port output power MAX 25W 1-5 port support PoE (first port output HiPoE_60W)
Function	Q_Lead-acid battery mode + L_Lithium battery mode
Network Protocol	IEEE 802.3 IEEE 802.3i 10BASE-T IEEE 802.3u 100BASE-TX IEEE 802.3ab1000BASE-T IEEE 802.3x IEEE 802.3z 1000BASE-X IEEE 802.3af/at/PoE++ Ai PSE
PoE Standard	IEEE802.3af/at/PoE++
Port Specification	10/100/1000BaseT(X)Auto
Transmission Mode	Store and Forward (full wire-speed)
Bandwidth	12Gbps
Packet Forwarding	8.64Mpps
MAC Address	2K
Buffer	2.5M
Transmission Distance	10BASE-T: Cat3,4,5 UTP (≤250 meter) 100BASE-TX: Cat5 or later UTP (150 meter) 1000BASE-TX: Cat6 or later UTP (150 meter) 1000BASE-SX: 62.5μm/50μm MMF(2m~550m) 1000BASE-LX: 62.5μm/50μm MM(2m~550m) or 10μm SMF(2m~5000m) Max. Support Transmission Distance 120KM for Single Mode Optical Fiber
Transmission Speed	Ethernet 10Mbps half-duplex, 20Mbps full duplex Fast Ethernet 100Mbps half-duplex, 200Mbps full duplex Gigabit Ethernet 2000Mbps full duplex

Power Pin	48V power supply:12+36-; 24V power supply:45+78-
Power Input	Support 12V solar panel input(≤33V) or with12V batteries Support 24V solar panel input(≤44V) or with 24V batteries 12V battery DC input: DC 15-26V;24V battery DC input:26-32V 12V/24V solar panel input power MAX 200W
Charging Function	Integrated fully automatic charging Integrated battery protection function Automatic Battery Voltage Recognition Integrated Lithium Battery Automatic Activation System Integrated Low Volume Start-up Protection System
Battery	Supporting 12V or 24V lead-acid batteries MAX 50AH, 5A Supporting 12V or 24V lithium batteries MAX 50AH, 5A
LED Indicator	PW: Power LED; BIN: Battery charging indicator; BOT: Battery discharging indicator; 6: (SFP LED); 4A-5A: Port 4-5 48V PoE ON light; 4B-5B: Port 4-5 24V PoE ON light CPU: System operation LED; VOUT: PoE output VOL normal indicator; SIN: Solar panel input indicator; VIN: DC input indicator
Operating Temperature/Humidity	-20～+65°C; 10%～90% RH Non-condensation
Storage Temperature/Humidity	-40～+70°C; 5%～90% RH Non-condensation
Product Size (L*W*H)	160mm*142mm*35mm
Packing Size (L*W*H)	300mm*175mm*100mm
N.W.	0.72kg (not including Solar energy panel, battery, or power adapter)
Installation	Rack-mount or wall mounting
Lightning Protection Level	3KV 8/20us; IP30
Certificate	CE mark, commercial; CE/LVD EN60950; FCC Part 15 Class B; RoHS;
Warranty	Whole device for 1 year (accessories not included)

Generator Control Panel

Battery	Lead-acid Battery		Lithium Battery	
Battery Voltage	12V	24V	12.6V	25.2V
Changing Mode	PWM (Current and voltage limit-constant current- voltage limit-voltage and current limit-floating charge)		PWM (Current and voltage limit-constant current- voltage limit)	
Self-consumption Supplement				

Self-consumption Detection Voltage	<12.6V	<25.2V	12.2V	24.4V
Rated Charging Current	5A		-	
Floating Charge Current	50mA-1000mA		-	
Charging Ending	Floating charge timing reached		Rated voltage, charging current<10mA	
Rated Discharging Current	6.5A	3.6A	8.5A	4A
POE Output Current	MAX1.25A			
POE Output Voltage	48~56V			
Maximum Photovoltaic Voltage	32V	44V	32V	44V
Maximum Charging Voltage	14.7V	29.6V	12.6V	25.2V
Floating Charge Voltage	13.7V	27.4V	-	-
Cut-off Discharging Voltage	10.1V	20.2V	8V	16V
Recovery Discharging Voltage	12.4V	25.8V	-	-
IIC Communication	IIC communication query and configuration of electricity, voltage, current, charging and discharging time and operating status			
Over-temperature Protection	Main board over temperature protection and battery over temperature(optional)			
Input Protection	Over-current, over-voltage, delayed start-up, and anti-reversal protection			
Output Function	Over-current, over-voltage, short-circuit			
Indicator	System normal operation indicator, battery indicator, normal input indicator, multi-function failure indicator			
Operating Temperature	-30℃~+65℃			

Indicator

Indicator(front)		Status	Description
Power LED: PW		Always ON Always OFF	Normal Power unconnected
Downlink LED	Orange (PoE)	Always ON	Powered devices connected and power supply normal
	Green (Link)	Always OFF	No powered devices connected or no power supply
SFP LED: 6		Always ON	SFP normally connected
		Always OFF	SFP abnormally connected

Indicator(front)	Status	Description	Indicator(front)	Status	Description
4B: 4 port 24V PoE	Always ON	24V PoE power supplied	5B: 5 port 24V PoE	Always ON	24V PoE power supplied
	Always OFF	24V PoE no power supplied		Always OFF	24V PoE no power supplied
4A: 4 port 48V PoE	Always ON	48V PoE power supplied	5A: 5 port 48V PoE	Always ON	48V PoE power supplied
	Always OFF	48V PoE no power supplied		Always OFF	48V PoE no power supplied
BOT: Discharging LED	Always ON	Battery in charging, electricity>15%	BIN: Charging LED	Always ON	Battery in charging, electricity<98%
	Always OFF	Battery discharging finished or not discharging		Always OFF	Battery charging or not in charging
	Flicker	1/2S: electricity<15%		Flicker	To be fully charged, electricity≥98%
BOT, BIN OFF at once: charging finished					

Indicator(front)	Status	Description	Indicator(front)	Status	Description
CPU: System operation LED	Always ON	System crashed	SIN: Solar energy IN LED	Always ON	Solar energy input normal
	Always OFF	System unsuccessfully started		Always OFF	Solar energy not input
	Flicker	1/2S: battery normal 1/4S: battery failure		Flicker	1/2S: solar energy in delayed charging (time: 10mins) 1/4S: solar energy voltage input fault, charging stopped
BOT: Discharging LED	Always ON	Battery in discharging, electricity>15%	BIN: Charging LED	Always ON	Battery in charging, electricity<98%
	Always OFF	Battery discharging finished or not in discharging		Always OFF	Battery charging finished or not in charging

	Flicker	1/2S: electricity<15%		Flicker	To be fully charged, electricity ≥98%
VOT: PoE voltage normal LED	Always ON	PoE voltage normal	VIN: DC IN LED	Always ON	DC IN normal
	Always OFF	PoE voltage abnormal		Always OFF	DC not input
				Flicker	DC IN voltage fault, charging stopped

Display

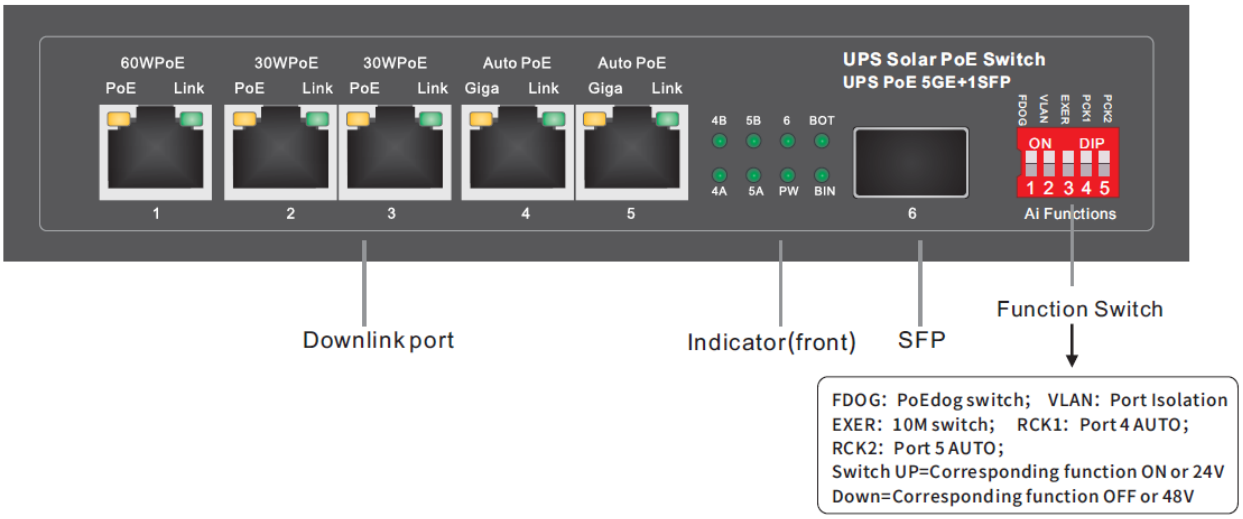

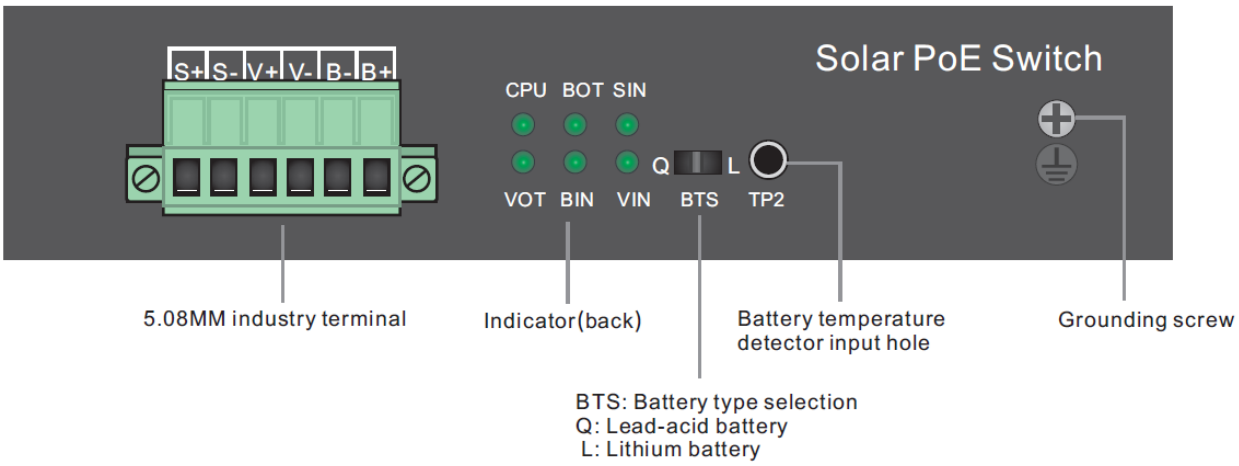

Terminal Connection

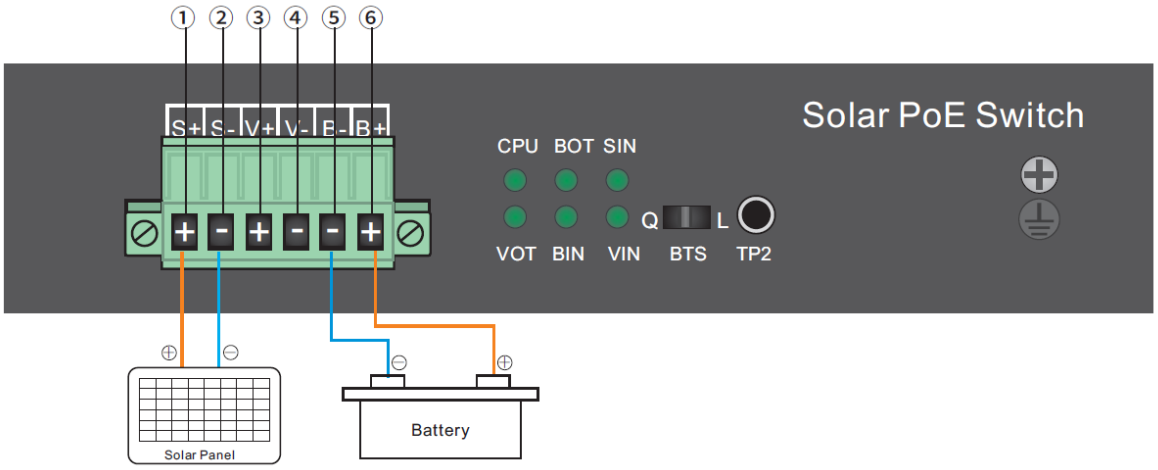

Note: ① S+ : solar energy anode ② S-: solar energy cathode ③ V+: DC anode
④ V-: DC cathode ⑤ B-: battery cathode ⑥ B+ : battery anode

Battery + Solar Panel Matching-usage

❶

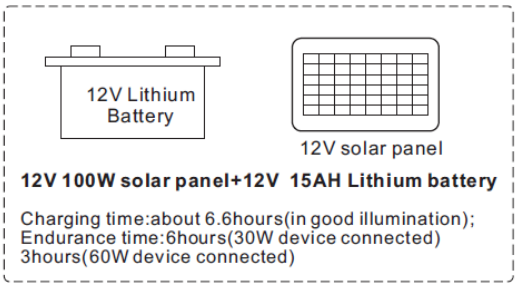

12V 100W solar panel+12V 15AH Lithium battery

Charging time:about 6.6hours(in good illumination);
Endurance time:6hours(30W device connected)
3hours(60W device connected)

❷

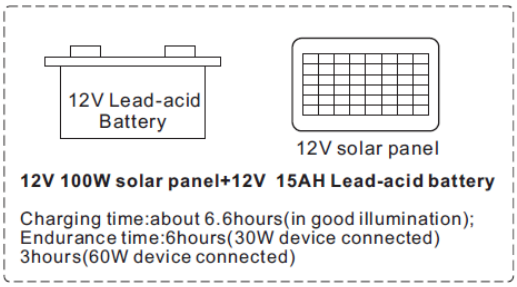

12V 100W solar panel+12V 15AH Lead-acid battery

Charging time:about 6.6hours(in good illumination);
Endurance time:6hours(30W device connected)
3hours(60W device connected)

Tips: The open-circuit voltage is 32V maximum and operating voltage is 18.5V.
(Please refers to actual configuration to get the specific solar panel power)

❸

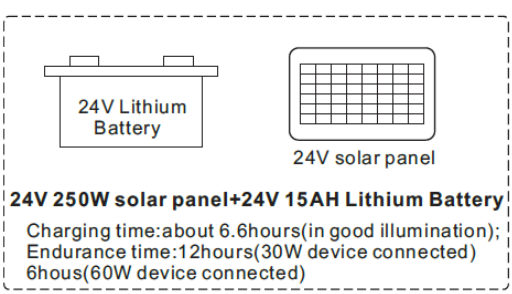

24V 250W solar panel+24V 15AH Lithium Battery

Charging time:about 6.6hours(in good illumination);
Endurance time:12hours(30W device connected)
6hous(60W device connected)

❹

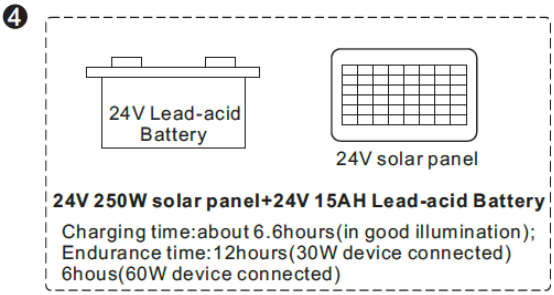

24V 250W solar panel+24V 15AH Lead-acid Battery

Charging time:about 6.6hours(in good illumination);
Endurance time:12hours(30W device connected)
6hous(60W device connected)

Tips: The open-circuit voltage is 45V maximum and operating voltage is 37V.
(Please refers to actual configuration to get the specific solar panel power)
Charging time computational formula=Battery AH (solar energy short-circuit current*0.55)
Discharging time computational formula= (Battery rated voltage*battery AH)/actual discharging power
The above computational results are only a reference of configuration and installation requirements.
Please accord to comprehensive factors such as local environment, light, weather etc. when you use.

Connection Schematic Diagram

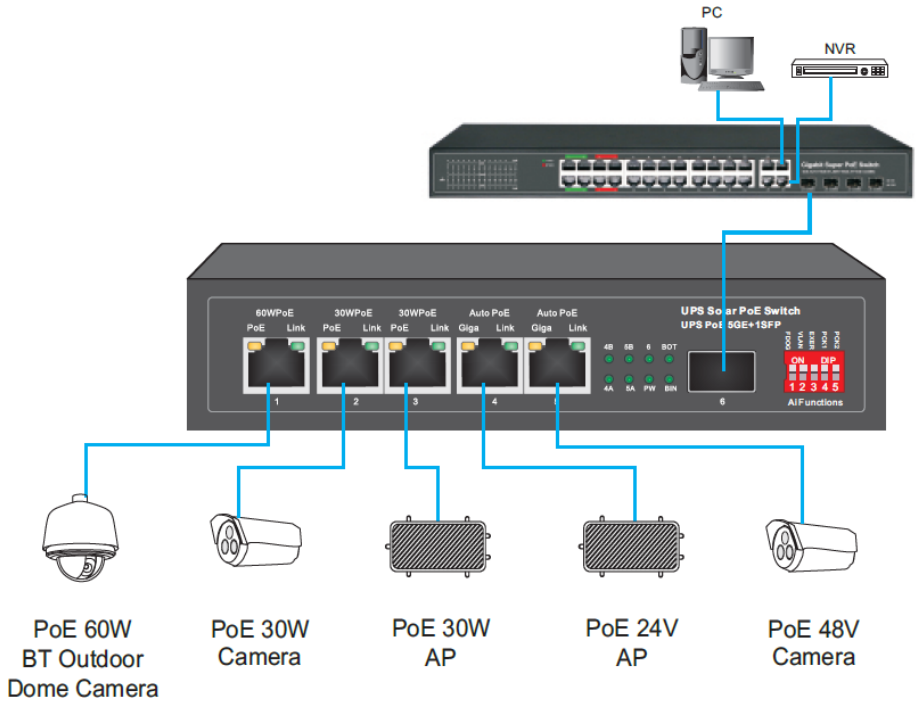

Scene Schematic Diagram

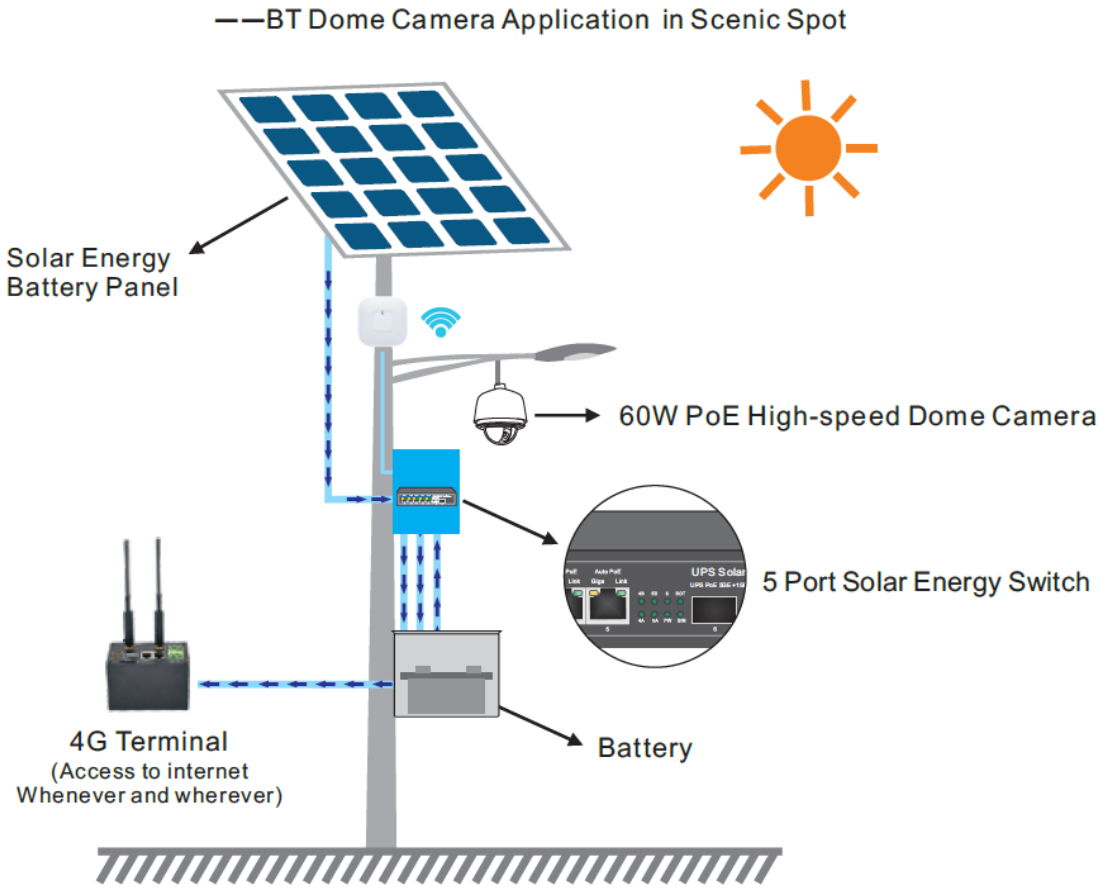

Ordering Information

PART NO.	DESCRIPTION
SW0605HIPOE-GF-DC	1*10/100/1000Base-TX 60W PoE port (Data/Power） 2*10/100/1000Base-TX 30W PoE port (Data/power) 2*10/100/1000Base-TX Auto PoE port (Data/power) 1*1000M SFP