GV58CG User Manual

GSM/GPRS/LTE CAT1/GNSS Tracker

TRACGV58CGUM003

Version: 1.02



Driving Smarter IoT

www. queclink .com

Document Title	GV58CG User Manual
Revision	1.02
Date	2024-05-23
Status	Release
Document Control ID	TRACGV58CGUM003

General Notes

Queclink offers this information as a service to its customers, to support application and engineering efforts that use the products designed by Queclink. The information provided is based upon requirements specifically provided to Queclink by the customers. Queclink has not undertaken any independent search for additional relevant information, including any information that may be in the customer's possession. Furthermore, system validation of this product designed by Queclink within a larger electronic system remains the responsibility of the customer or the customer's system integrator. All specifications supplied herein are subject to change.

Copyright

This document contains proprietary technical information which is the property of Queclink Wireless Solutions Co., Ltd. The copying of this document, distribution to others, and communication of the contents thereof, are forbidden without express authority. Offenders are liable to the payment of damages. All rights are reserved in the event of a patent grant or registration of a utility model or design. All specifications supplied herein are subject to change without notice at any time.

Queclink Confidential

Contents

Contents 2
Table Index 3
Figure Index 4
0. Revision History 5
1. Introduction 6
1.1. Reference 6
1.2. Terms and Abbreviations 6
2. Product Overview 7
2.1. Appearance 7
2.2. Wiring Scheme 7
2.3. Interface Definition 8
2.4. LED Description 8
2.5. Power Connection 9
2.6. Ignition Detection 9
2.7. Digital Output 10
2.8. Analog Input/Digital Input 10
2.9. 1-WIRE Interface 10
3. Get Started 11
3.1. Parts List 11
3.2. External Cable Interface 11
3.3. Turn on/Turn off 12
3.4. Open the Case 12
3.5. Install a SIM Card 13
3.6. Install the Internal Battery 13
3.7. Close the Case 14
3.8. Motion Sensor Direction 14
4. Troubleshooting and Safety Information 15
4.1. Troubleshooting 15
4.2. Safety Information 15

Queclink Confidential

Table Index

Table 1: GV58CG Protocol Reference 6
Table 2: Terms and Abbreviations 6
Table 3: Description of 9-PIN Connections 8
Table 4: LED Description 9
Table 5: Electrical Characteristics of Ignition Detection 9
Table 6: Electrical Characteristics of Digital Output.....10
Table 7: Electrical Characteristics of Digital Input.....10
Table 8: Parts List 11
Table 9: User Cable Color Definition 11
Table 10: Solutions to Possible Trouble 15

Queclink Confidential

Figure Index

Figure 1: Appearance of GV58CG....7
Figure 2: 9-PIN Wire Harness of GV58CG....8
Figure 3: Digital Output Internal Drive Circuit....10
Figure 4: Open the Case....12
Figure 5: SIM Card Installation....13
Figure 6: Battery Installation....13
Figure 7: Close the Case....14
Figure 8: Motion Sensor Direction....14

Queclink Confidential

0. Revision History

Revision	Date	Author	Description of Change
1.00	2022-07-21	Nancy Yin	1. Initial.
1.01	2024-04-08	Nancy Yin	1. Renamed GV58CEU(CG) to GV58CG. 2. Added chapter 2.2 **Wiring Scheme**.
1.02	2024-05-23	Nancy Yin	1. Modified the terms and abbreviations in chapter 1.2.

Queclink Confidential

1. Introduction

The GV58CG is a compact GNSS tracker designed for a wide variety of vehicle tracking applications. It has multiple I/O interfaces that can be used for monitoring or controlling external devices. Its built-in GNSS receiver has superior sensitivity and fast time to first fix. Its built-in 3-axis accelerometer allows driving behaviour monitoring, motion detection and extended battery life through sophisticated power management algorithms. The @Track protocol supports a wide variety of reports including emergency, geo-fence boundary crossings, driving behaviour, low battery and scheduled GNSS position.

1.1. Reference

Table 1: GV58CG Protocol Reference

SN	Document Name	Remark
[1]	GV58CG @Track Air Interface Protocol	The air protocol interface between GV58CG and the backend server.

1.2. Terms and Abbreviations

Table 2: Terms and Abbreviations

Abbreviation	Description
AIN	Analog Input
/IN	Digital Input, Negative Trigger
OUT	Digital Output
IGN	Ignition Input, Positive Trigger
GND	Power and Digital Ground
PWR	External DC Power Input

Queclink Confidential

2. Product Overview

2.1. Appearance



Figure 1: Appearance of GV58CG

2.2. Wiring Scheme

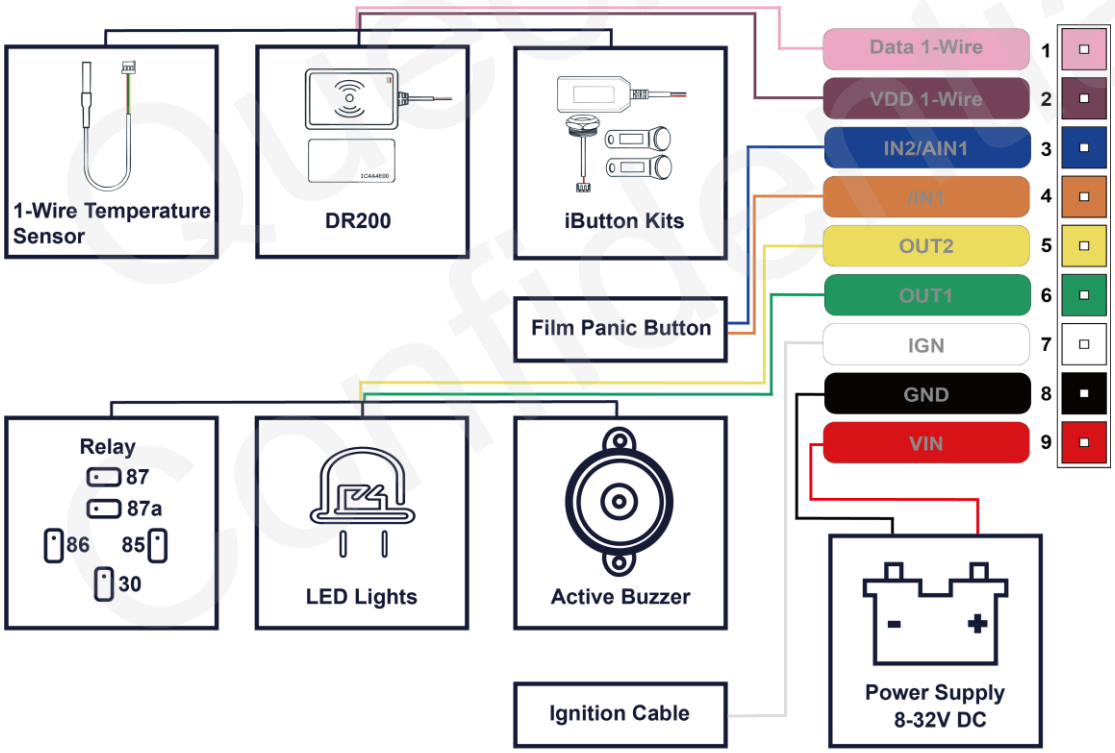

2.3. Interface Definition

GV58CG has a 9-PIN **Wire Harness**. It contains the connections for power, and I/O. The sequence and definition of the 9-PIN **Wire Harness** are shown in the following figure:

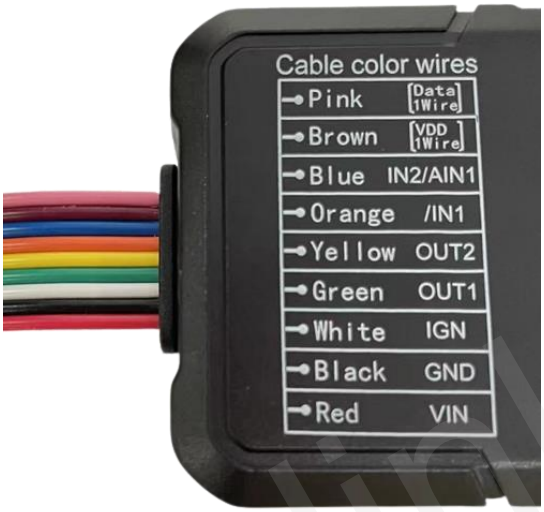

Figure 2: 9-PIN Wire Harness of GV58CG

Table 3: Description of 9-PIN Connections

Interface	PIN Number	PIN Name	Description
	1	Data_1-Wire	1-wire data bus
	2	VDD_ 1-Wire	1-wire device power output
	3	IN2/AIN	Digital Input/Analog input, 0V-30V
	4	/IN1	Negative trigger input
	5	OUT2	Digital output, Open drain, 150mA max
	6	OUT1	Digital output, Open drain, 150mA max
	7	IGN	Ignition input, positive trigger
	8	GND	GND
	9	VIN	External DC power input, 8V-32V

2.4. LED Description

GV58CG has three status LEDs, namely GNSS LED, CELL LED and PWR LED.

Table 4: LED Description

LED	Device Status	LED Status
GNSS	GNSS chip is powered off.	OFF
	GNSS sends no data or data format error occurs.	Slow flashing
	GNSS chip is searching GNSS information.	Fast flashing
	GNSS chip has gotten GNSS information.	ON
CELL	The device is searching network.	Fast flashing
	The device has been registered on the network.	Slow flashing
	SIM card needs pin code to unlock.	ON
PWR	No external power and internal battery voltage is lower than 3.6V.	OFF
	No external power and internal battery voltage is lower than 3.7V.	Slow flashing
	The external power supply has been connected to the device and the internal battery of the device is charging.	Fast flashing
	The external power supply has been connected to the device and the internal battery of the device is fully charged.	ON

Note:

1. GNSS LED, CELL LED and PWR LED can be configured to be turned off after a period time by using the configuration tool.
2. Fast flashing: About 100ms ON/ 200ms OFF.
3. Slow flashing: About 200ms ON/ 1000ms OFF.

2.5. Power Connection

VIN(Red)/GND(Black) are the power input pins. The input voltage range for this device is from 8V to 32V. The device is designed to be installed in vehicles that operate on 12V or 24V vehicle without the need for external transformers.

2.6. Ignition Detection

Table 5: Electrical Characteristics of Ignition Detection

Logical State	Electrical State
Active	5.0V to 32V
Inactive	0V to 3V or Open

IGN(White) is used for ignition detection. It is strongly recommended to connect this pin to ignition key **RUN** position as shown above.
An alternative to connecting to the ignition switch is to find a non-permanent power source that is only available when the vehicle is running, for example, the power source for the FM radio.

Queclink Confidential

IGN signal can be configured to start transmitting information to the backend server when the ignition is on, and enter power saving mode when the ignition is off.

2.7. Digital Output

There are two digital outputs on GV58CG. All two digital outputs are of open drain type and the maximum drain current is 150mA.

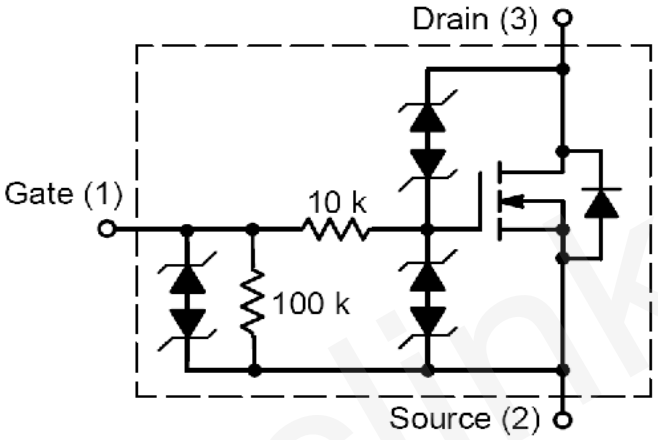

Figure 3: Digital Output Internal Drive Circuit

Table 6: Electrical Characteristics of Digital Output

Logical State	Electrical Characteristics
Enable	<1.5V @150mA
Disable	Open drain

2.8. Analog Input/Digital Input

There is one input can be configured as an analog input or a digital input on GV58CG.
For the **analog input/digital input**, the range of input voltage is from 0V to 30V.
The following diagram shows the recommended connection.

Table 7: Electrical Characteristics of Digital Input

Logical State	Electrical Characteristics
Active	0V to 0.6V
Inactive	Open

2.9. 1-WIRE Interface

There are two lines dedicated to the 1-WIRE, VDD and Data for one wire.

Note:
Please keep the voltage on the VDD-1-WIRE and DATA-1-WIRE to **no more than 5.5V** when using 1-WIRE.

3. Get Started

3.1. Parts List

Table 8: Parts List

Name	Picture
GV58CG Locator	86.7mm*46.4mm*18.1mm 
Data_Cable_M_V4 (Optional)	

3.2. External Cable Interface

Table 9: User Cable Color Definition

Definition	Color	PIN No	Cable
Data 1Wire	Pink	1	
VDD 1Wire	Brown	2	
IN2/AIN1	Blue	3	
/IN1	Orange	4	
OUT2	Yellow	5	
OUT1	Green	6	
IGN	White	7	
GND	Black	8	
VIN	Red	9	

Queclink Confidential

3.3. Turn on/Turn off

- Turn on: Connect the device to external power, and it will be turned on automatically. CELL LED will be on.
- Turn off: Set <*Battery Working Mode*> in **AT+GTCFG** to **0** to disable the backup battery, and then disconnect the device from the external power.

3.4. Open the Case



Figure 4: Open the Case

Insert the triangular-pry-opener into the gap of the case as shown in the figure, and push the opener up until the case is unsnapped. The GV58CG device has 4 gaps.

When GV58CG is shipped, the case of GV58CG is not closed completely, which allows the user to open it relatively easily for SIM card and battery installation.

Queclink Confidential

3.5. Install a SIM Card



Figure 5: SIM Card Installation

Open the case and ensure the unit is not powered. Slide the holder up to open the SIM card holder. Insert the SIM card into the holder as shown above with the gold-colored contact area facing down. Take care to align the cut mark. Close the SIM card holder. Close the case.

3.6. Install the Internal Battery



Figure 6: Battery Installation

3.7. Close the Case



Figure 7: Close the Case

Put the upper cover on the lower cover, and press the covers to make sure they are closed completely.

3.8. Motion Sensor Direction

GV58CG has an internal 3-axis accelerometer supporting driving behavior monitoring, crash detection and motion detection. The following figure shows the directions of the motion sensor.



Figure 8: Motion Sensor Direction

Note:

1. The opposite direction of the cable bundle is the positive direction of the X-axis.
2. The Z-axis is in the positive direction above the front housing surface.
3. The positive directions of the three axes are perpendicular to each other, as shown in the above figure.

Queclink Confidential

4. Troubleshooting and Safety Information

4.1. Troubleshooting

Table 10: Solutions to Possible Trouble

Trouble	Possible Reason	Solution
After GV58CG is turned on, the CELL LED always flashes quickly.	The signal is too weak, and GV58CG cannot be registered on the network.	Please move GV58CG to places with good GSM coverage.
Messages cannot be reported to the backend server.	The IP address or port of the backend server is wrong.	Make sure the IP address for the backend server is an identified address on the Internet.
Unable to power off GV58CG.	Unable to power off GV58CG if charger is connected.	Disconnect charger, and try again.
GV58CG cannot get successful GNSS fix.	The GNSS signal is weak.	Please move GV58CG to a place with open sky. It is better to let the top surface (the surface with LED indicator) face the sky.

4.2. Safety Information

- Please do not disassemble the device by yourself.
- Please do not put the device on overheated or too humid place, and avoid exposure to direct sunlight. Too high temperature will damage the device or even cause battery explosion.
- Please do not use GV58CG on the airplane or near medical equipment.

Queclink Confidential