Product Datasheet

10-port Full Gigabit PoE Switch

(H3108P)



OVERVIEW

The H3108P is a full gigabit unmanaged PoE switch. it has 8*10/100/1000Base-T PoE ports and 2*10/100/1000Base-T uplink RJ45 ports, Port 1-8 can support IEEE802.3af/at standard PoE power supply, single port PoE power up to 30W. As a PoE power supply device, it can automatically detect and recognize the power receiving equipment that meets the standard and supply power through the network cable. It can supply power to POE terminal equipment such as wireless AP, webcam, VoIP phone, video access control intercom, etc. through network cable to meet the network environment that needs high-density PoE power supply. It is suitable for hotels, campuses, factory quarters and small and medium-sized enterprises to form an economy efficient network.

Unmanaged model, plug and play, no configuration, easy to use.

FEATURE

■ Full gigabit rate, dual RJ45 ports uplink

◇ Provides Gigabit Ethernet ports and dual RJ45 ports uplink for flexible networking and meets the networking requirements of various scenarios.

◇ All ports support non-blocking wire-speed forwarding for smoother transmission.

◇ Support IEEE 802.3x full-duplex flow control and Backpressure half-duplex flow control.

■ Intelligent PoE power supply

◇ 8*10/100/1000Base-T RJ45 ports, meeting the needs of security monitoring, teleconferencing system, wireless coverage, and other scenarios.

◇ IEEE802.3af/at PoE standard, without damaging non-PoE devices.

◇ Priority system for PoE port, it will supply power to the high priority level port first when the power budget is insufficient and avoid overwork of the device.

■ Stable and reliable, easy to use

◇ CCC,CE, FCC, RoHS.

◇ Plug and play, no configuration, simple and convenient.

◇ Low power consumption, galvanized steel casing, no fan.

◇ The user-friendly panel can show the device status through the LED indicator of PWR, Link, PoE.

◇ Self-developed power supply, high redundancy design, providing a long term and stable PoE power output.

TECHNICAL SPECIFICATION

Model	H3108P
Interface Characteristics	
Fixed Port	8*10/100/1000Base-T PoE ports (Data/Power) 2*10/100/1000Base-T uplink RJ45 ports (Data)

Ethernet Port	Port 1-8 can support 10/100/1000Base-T auto detect, full / half duplex MDI / MDI-X adaptive
Twisted Pair Transmission	10BASE-T:Cat3,4,5 UTP(≤100 meter) 100BASE-TX:Cat5 or later UTP(≤100 meter) 1000BASE-T : Cat5e or later UTP(≤100 meter)
Chip Parameter	
Network Protocol	IEEE802.3 10BASE-T, IEEE802.3i 10Base-T IEEE802.3u 100Base-TX, IEEE802.3ab 1000Base-T, IEEE802.3x
Forwarding Mode	Store and Forward(Full Wire Speed)
Switching Capacity	20Gbps (Non-blocking)
Forwarding Rate@64byte	14.88Mpps
MAC	2K
Buffer Memory	2M
Jumbo Frame	1536byte
LED Indicator	Power: PWR (green), network: Link (green), PoE: PoE (green)
PoE & Power Supply	
PoE Port	Port 1 to 8
Power Supply Pin	Default 1/2(+), 3/6(-)
Max Power Per Port	30W, IEEE802.3af/at
Total PWR / Input Voltage	120W/ (AC100-240V)
Power Consumption	Standby <5W, Full load <120W
Power Supply	Built-in power supply, AC100~240V 50-60Hz 2.2A
Physical Parameter	
Operation TEMP / Humidity	-20~+55°C,5%~90% RH Non condensing
Storage TEMP /	-40~+75°C, 5%~95% RH Non condensing

Humidity	
Dimension (L*W*H)	195*130*40mm
Net /Gross Weight	<0.9kg / <1.2kg
Installation	Desktop, wall-mounted
Certification & Warranty	
Lightning Protection/ Protection level	Lightning protection: 4KV 8/20us, Protection level: IP30
Certification	CCC, CE mark, commercial, CE/LVD EN60950, FCC Part 15 Class B, RoHS
Warranty	1 year, lifelong maintenance.

DIMENSION

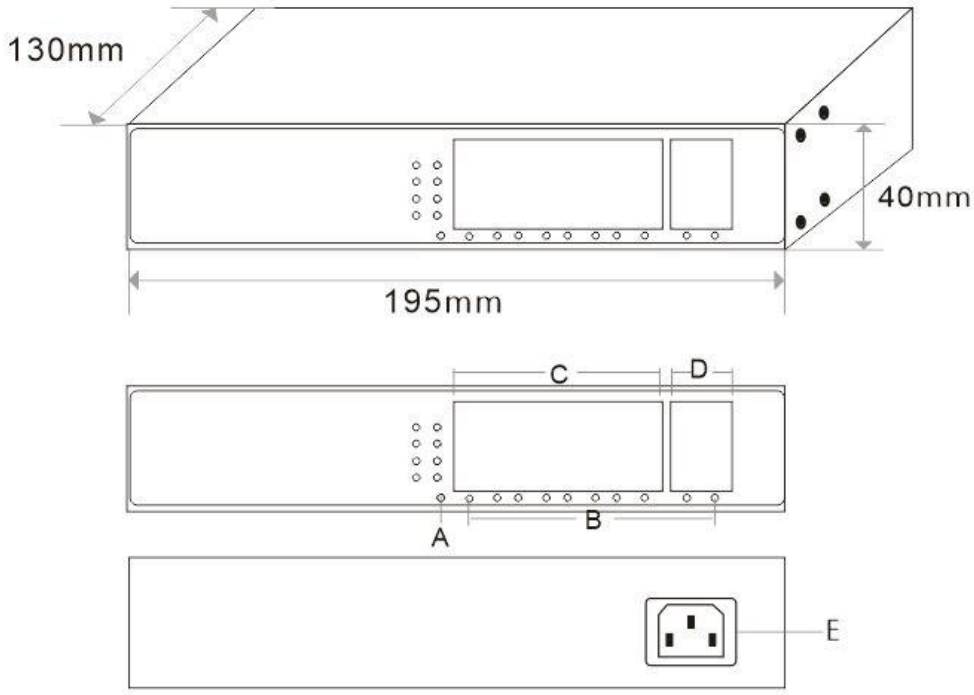

A. Working indicator

B. PoE indicator

C. 8x10/100/1000M PoE ports

D. 2*10/100/1000M uplink RJ45 ports

E. Power input port AC100-240,50/60Hz

APPLICATION

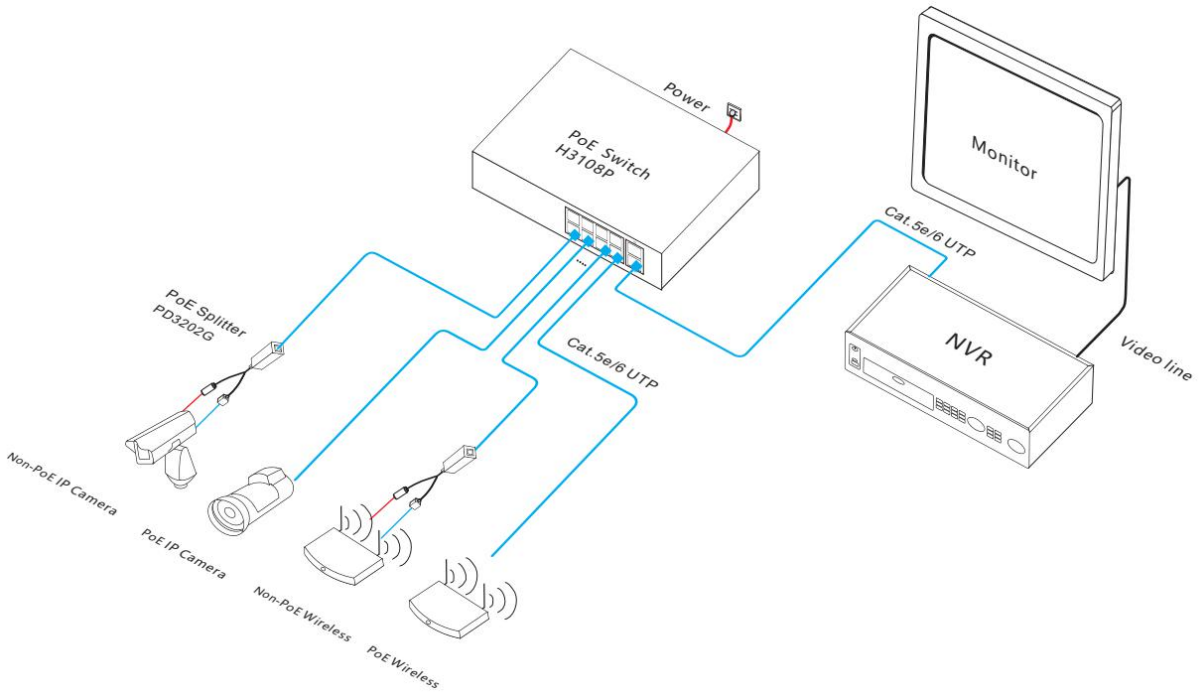

ORDERING INFORMATION

Model	Description
H3108P	Unmanaged PoE switch with 8*10/100/1000M PoE ports and 2*10/100/1000M RJ45 ports. Port 1-8 can support IEEE802.3af/at PoE standard. Built-in 120W power supply.

PACKING LIST

	CONTENT	QTY	UNIT
Packing List	10-port full gigabit PoE switch	1	SET
	AC Power Line	1	PC
	User Guide	1	PC
	Warranty Card	1	PC