PB-PARKBARRIER-PR0303

User Manual

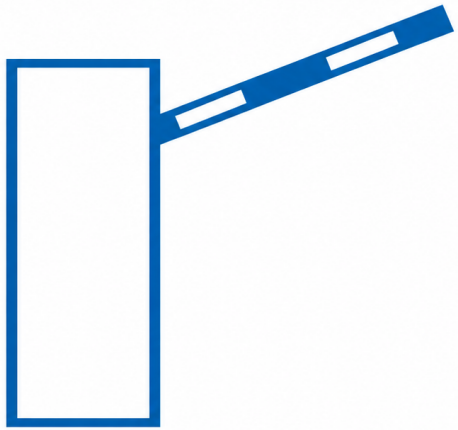

Table of Contents

Brief Description 2
Our Advantages
Mechanical features 3
Electrical features 3
Safety features 3
Dimensions & Parameters
Dimensions 4
Parameters 4
Direction 4
Housing structure 5
Boom type 8
Machine core structure 9
Spring hanging hole illustration 10
Installation Instructions
Installation 11
Instruction details 11
Debugging, Problems & Solving way
Debugging instructions 13
Problem & solving way 13
Main Board Wiring & Setting
Wiring diagram 14
Parameter setting 15
Using & Maintenance
Using instructions 18
Maintenance 18
Service Items & Packing List
Service items 19
Packing list 19
Guarantee Card 19

Brief Description

Dear User:
Thanks for your trust.
Please read this user manual carefully before using barrier gates.
The manual includes: main functions (our own advantages), dimensions, parameters, main board wiring diagram, installation instructions, testing, and packing list.
The user manual can help you to know more details about barrier gate, such as mechanical working theory, using guide, matters need attention.
We should use the barrier in right way to ensure the working life.
The user manual also analyzes some problems which maybe appear during using. And you can find out the way to solve each problem in the manual.
At the same time, we sincerely hope that you can give us some suggestions to make our barrier gates better and better.
Thanks!

1. Mechanical features

● Nice designed cabinet: strong, waterproof, can be used outside.
● Integrative machine core: all part is made by mold, so all parts can be more accurate. And so, the barrier gate can be much more stable;
●60W turbine worm transmission deceleration induction motor, saving energy, motor with fan, prevent overheating, could working 24 hours without stop: Drive Steady, Noise Lower, Structures Compact, can realize self-locking;
●Accurate link mechanism: link mechanism can release boom's shake and motor load, so the barrier gate can move more stable and barrier gate's working life can be longer;
●Lock or open the boom by hand: we can turn motor handle to lock or open the boom when power is off.

2. Electrical features

●High integrated level, Powerful function;
●Shut down functions (motor will be shut down automatically after 6 seconds) and thermal protection functions can effectively protect our motor;
●Intelligent limited sensor to check open & close position automatically
●Anti-smash function
●Open and close speed are adjustable
●With LED indicator, easier to use and maintenance.
●Imported high-power MOSFET, contactless control motor switch
●Using imported photoelectric isolated protection circuit to ensure signals' stability;
●Support standard remote control and 10 groups can be added
●Using imported Magnetic core transformer to ensure working performance in damping situation;

3.Safety features

●Auto bounce back function, make sure car and facilities' safety
●Pressure sensor - Anti-crash functions: If the boom meets something during closing process, the boom will be opened automatically;
●Loop detector - Anti-crash functions: If car stands under the boom, the barrier gates cannot be close. And the barrier gates will be closed automatically when the car passes the boom;
●Open first functions: no matter the boom locates any position, it will be opened if barrier gate gets open signal;
●Plastic strips: we can install plastic strip into our boom, it can decrease accident damages.

1.Dimensions

Boom type	Boom Length(M)	Open time(S)	Close time(S)	The height of boom support
LED Arm	≤3	1.8	2	890mm
	≤4	3	3.5	
Telescopic boom	≤3.5	1.8	2	
	≤4.5	3	3.5	
	≤6	5	6	

2.Parameters

Voltage	DC24V
Motor power consumption	100W
Working temperature	-30℃~80℃
Humidity	≤90%
Boom length	≤6M
Open/close time	1.8S~3S/3S~6S
The height of boom support	890MM
Remote control distance	≤30M
IP	IP54
Input interface	+12V relay signal or ≥100MS pulse signal
Remote control frequency	430.5MHz

3.Direction

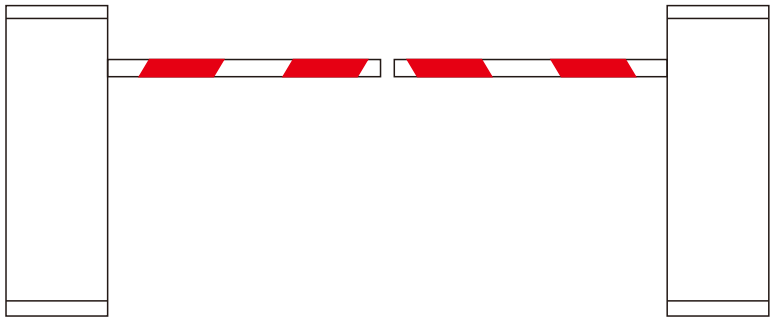

Left-hand version

Right-hand version

4. Housing structure

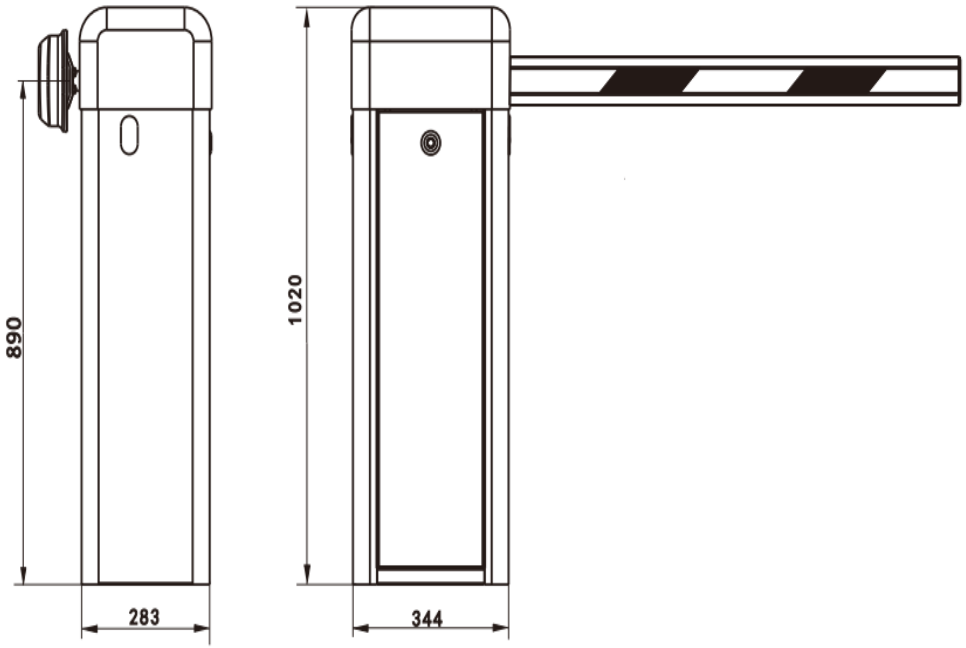

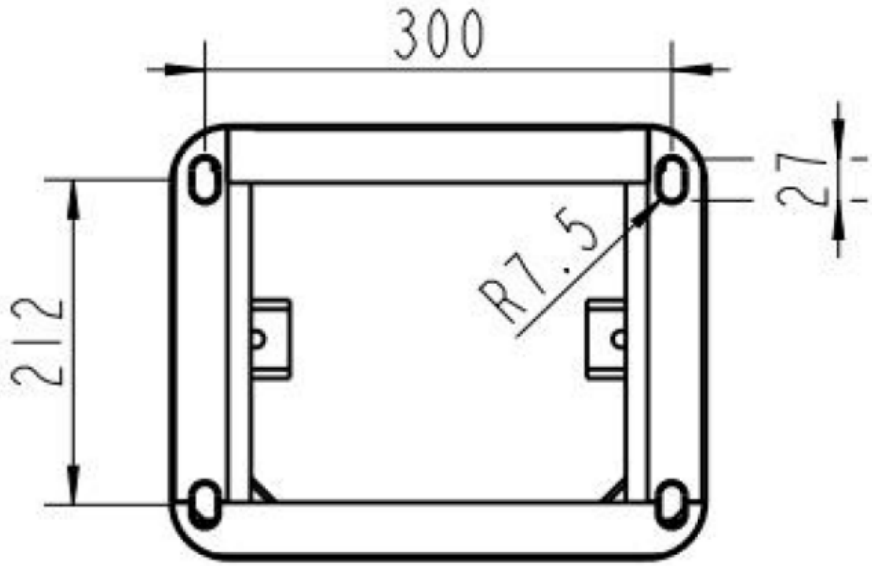

5 . Barrier structure

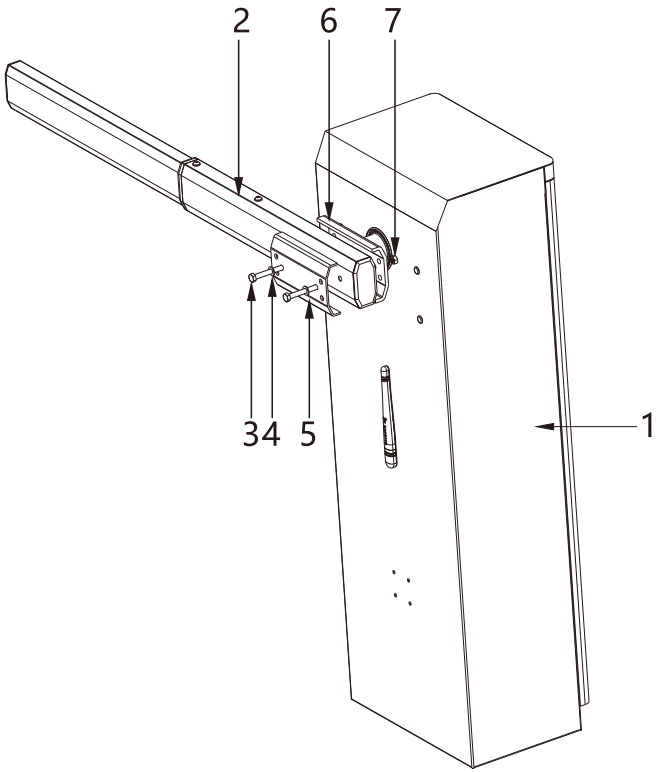

NO	Name	Quantity
1	Cabinet	1
2	Arm	1
3	Hexagonal socket screw M8*65	2
4	Flat gasket φ8(SUS304)	2
5	Arm cover	1
6	Arm holder	1
7	Hexagonal socket screw M8	2

6 . Boom type

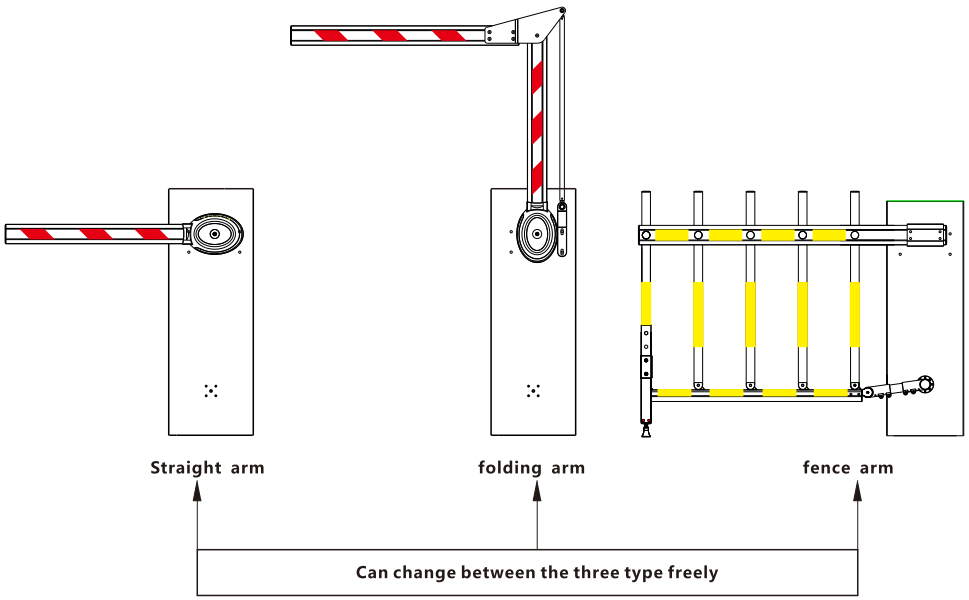

6. Machine core structure

Use turbine worm drive mechanism and bearing turning mechanism to control the boom movement. And limited sensor can accurately control boom's vertical position and horizontal position

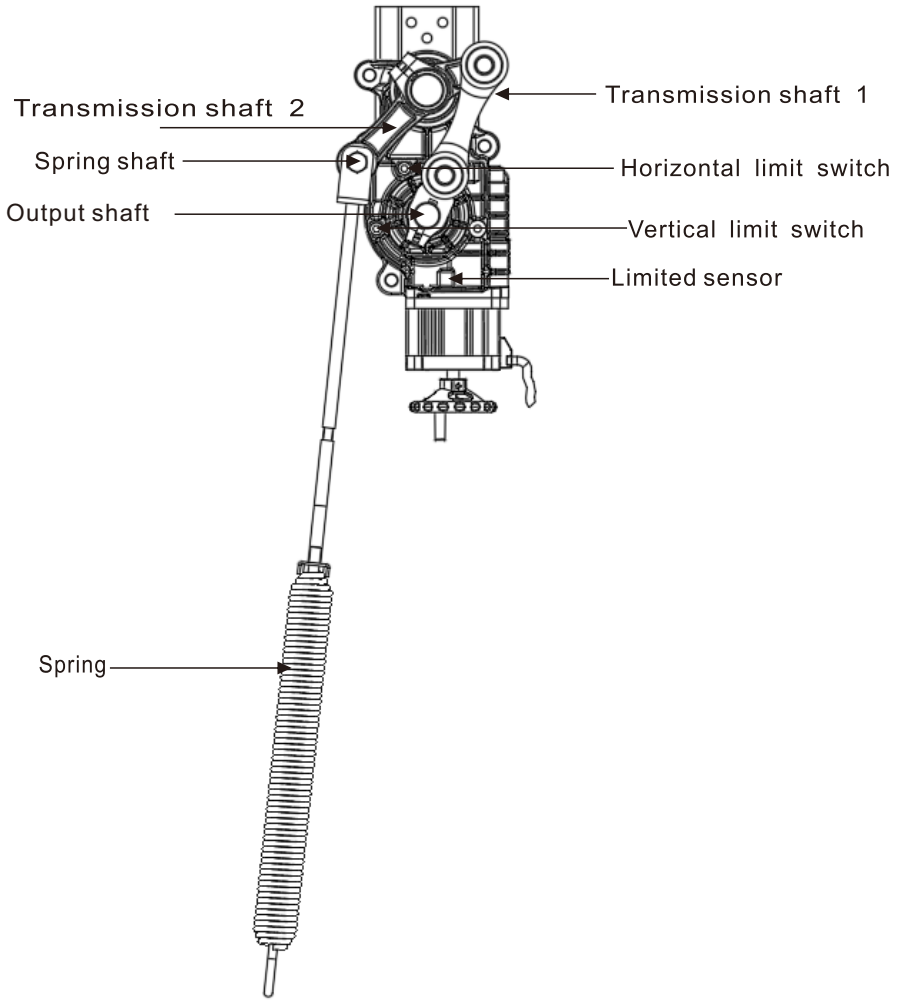

7.Spring hanging hole illustration

A balance stretch spring is installed inside the gate. In the process of debugging and installation, the line diameter and quantity of the spring can be replaced according to the length of the gate rod (4M, 3M, etc.) to achieve the balance of torque.

The line diameter and number of the spring should be determined according to the length and speed of the rod. The take-off and landing rod is stable, and there is no abnormal sound and vibration. It is recommended not to replace the spring configured when leaving the factory.

Boom type	Boom length	Spring quantity&type
Straight boom with rubber	L≤3.5M	2*φ4.5
	3.5M＜L≤6M	2*φ5.5
Folding arm	L≤3.5M	2*φ4.5
	3.5M＜L≤6M	2*φ5.5
Fence arm	L＜4M	2*φ5.5
	4M≤L≤5M	2*φ6.0

Notes: we must change spring type and hole, adjust the corresponding parameters if we change boom length.

1. Installation

●Check packing list to make sure all in right way

●According to barrier arm direction and actual situation to confirm fix place. If ground isn't concrete foundation or it is a slop, suggest to build a horizontal concrete foundation; After installation, barrier box should be perpendicular to ground

●According control center or security room position, reference (GB 232 electrical device installation and check before acceptance standard)'s relative rules to set power wires and signal wires (the two type wires should be set in different pipes)

● Use expansion screw (follow packing list part to confirm install number)to fix barrier gate cabinet then start to use

● Adjust boom arm to horizontal position by hand switch to confirm boom holder fix position (this step is optional)

● Connect and check all wires to barrier main board according to wiring diagram

Notes: Should cut off power during installations.

2. Instruction Details

1. Line pre-buried

build concrete basement if it is needed (basement size should be bigger about 100-150mm than barrier base size). Bury power wires and signal wires between barrier and control center.

2. Fix barrier box

Choose the right place and fix barrier box by expansion screw.

3. Install boom

After fix barrier cabinet, install boom arm onto arm holder. Confirm boom arm in right place then fix screws. If we need to install barrier arm holder, adjust arm to horizontal position by hand switch to check holder fixing position, then fix arm holder.

4. Install other device

You can connect and debugging other devices according to wiring diagram.

5. Install loop detector

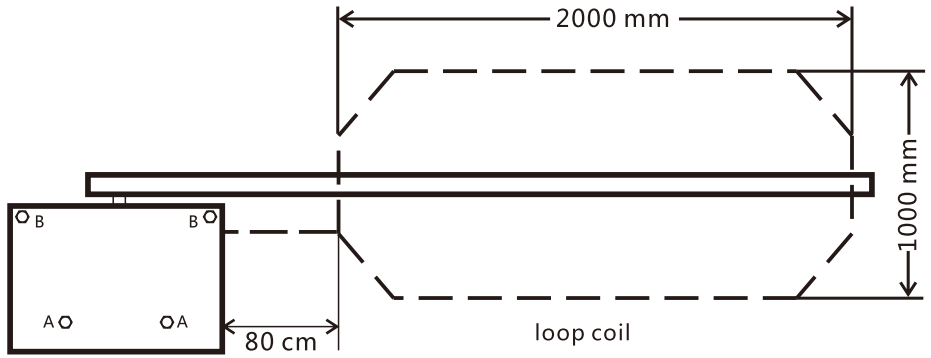

A: 2pcs M12*150 expansion bolt, expansion pipe is higher 25mm than ground

B: 2pcs M12*100 expansion bolt, expansion pipe height same as ground

5.1 Draw loop coil shape: width is 1000mm, length depend on arm length, two sides is narrower than the arm 700mm to 1000mm, make a chamfer at 4 corners to prevent wires damages.

5.2 Use cutting machine to cut a groove according to the draw. Groove dimension: width 3-5mm, depth:30mm, and cut a groove to barrier gate cabinet.

5.3 Put one end of the coil with enough length into cabinet, then circle it along the groove 5 times, then twist wires and connect them to loop detector ports 7 & 8.

5.4 Test the loop sensor to sure all right. Then use cement to bury the groove.

1.Debugging Instructions

Item	Test way
Boom isn't in close position/open position	1. Loosen the two locking screws of the main transmission shaft, turn the boom lever to the horizontal position, tighten the screws to re-learn the limit. 2. Manually learn the open and close position.
Boom shake during open	1. Open speed is too large, decrease the parameters of F-21. 2. Adjust the parameters deceleration position of opening of F-23. 3. Spring strength is too large, adjust the spring hole position or loosen the adjusting boom to adjust the spring strength.
Boom shake during close	1. Close speed is too large, decrease the parameters of F-26. 2. Adjust first closing deceleration supervising the parameters of the F-28. 3. Spring strength is too small, adjust the spring hole position or tighten the adjusting boom to adjust the spring strength.

2.Problem & solving way

No	Problem	Reason	Solving way
1	Power indicator light is off, press button, no response	1. Don't connect power	1. Connect power
2	Power indicator light is on, but remote controller doesn't work	1. Remote control code doesn't match 2. Receiver module doesn't work 3. Same frequency interference 4. Remote control doesn't copy	1. Recode 2. Change receiver module 3. Change other frequency 4. Copy remote control
3	Power light and working light are on, but motor doesn't work	1. Motor wire loose	1. Reconnect wires
4	Limited sensor doesn't work	1. Limit sensor learning is wrong	1. Relearn limited position
5	Remote control can't work	1. Battery is power off 2. The control is broken	1. Change battery 2. Change remote control
6	Control board display E1	1. Motor wiring error 2. Motor wire not connected 3. Motor interface is damaged 4. Motor failure	1. Check motor wires and hall wires 2. Connect motor wires 3. Change main board 4. Change motor

1.Wiring diagram

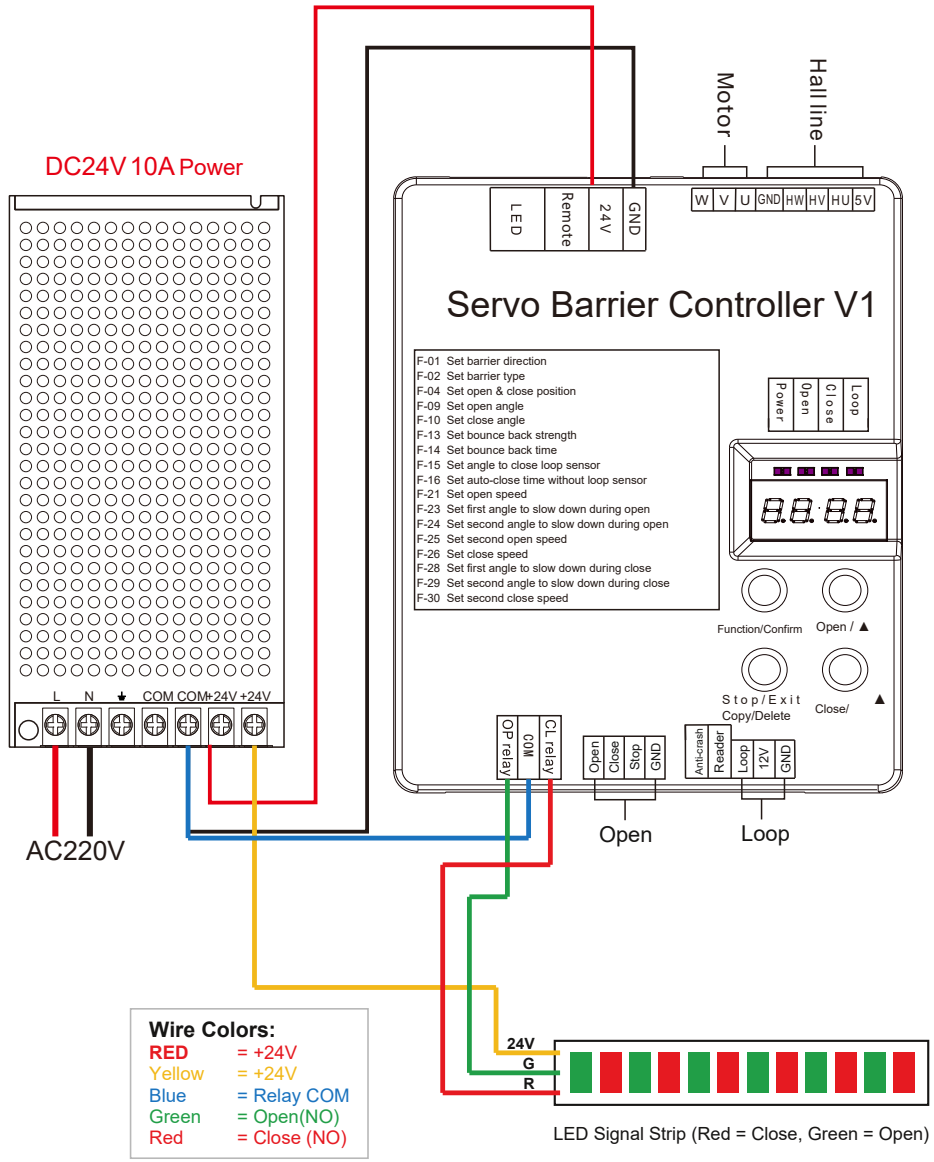

2. Board parameter settings

A. Parameters:

F-01 Set barrier direction
F-02 Set barrier type
F-04 Set open & close position
F-09 Set open angle
F-10 Set close angle
F-13 Set bounce back strength
F-14 Set bounce back time
F-15 Set angle to close loop sensor
F-16 Set auto-close time without loop sensor
F-21 Set open speed
F-23 Set first angle to slow down during open
F-24 Set second angle to slow down during open
F-25 Set second open speed
F-26 Set close speed
F-28 Set first angle to slow down during close
F-29 Set second angle to slow down during close
F-30 Set second close speed

B. Parameter debugging

Note: The equipment has been debugged well before leaving the factory, and the barrier and arms can be installed directly. It is recommended not to modify the factory parameters casually.

For every step below: press "Open" or "Close" to change the value, then press "Confirm" to save it.

1. **Barrier direction:** Make sure the motor wires are connected correctly, then press and hold "Function/Confirm" for 3 seconds; the LED displays F00. Press "Open" until the LED displays F01, then press "Confirm/Stop/Copy/Delete"; the LED now shows the barrier direction, where a marker on the left ("|--") means the right direction and a marker on the right ("--|") the left direction. Select the direction that matches the actual installation, press "Confirm/Stop/Copy/Delete", then press "Function/Confirm" for 3 seconds to save the data. The power must be switched off and on again for this setting to take effect.

2. **Manual learning of open & close positions:** When the LED displays F04, press "Confirm", then press "Close" to change the value to 02 and press "Confirm" again; the controller restarts. Press "Open" and the LED displays 01; the boom stops after reaching the open position. Keep pressing "Close" until the boom is vertical, then press and hold "Confirm" for 2 seconds and release it; the LED displays 02. Now find the close position manually: keep pressing "Close" until the boom reaches the close position, then press and hold "Confirm" for 2 seconds and release it. The LED displays 00, which means the learning is complete. If there are eaves, etc., select 03 for F04 and learn the position manually, closing first and then opening.

3. **Open angle:** When the LED displays F-09, press "Confirm" to enter the opening angle adjustment, then press "Open" or "Close" to adjust the opening angle. The larger the value, the larger the opening angle; the smaller the value, the smaller the opening angle.

4. **Close angle:** When the LED displays F-10, press "Confirm" to adjust the angle of closing, then press "Open" or "Close" to change it. The value of 30 represents the level position of the boom: if the value is larger than 30, the boom deviates in the direction of opening; if it is smaller than 30, the boom deviates in the direction of closing. The larger the value, the larger the angle of deviation of the boom in the direction of opening; the smaller the value, the smaller the angle of deviation.

5. **Bounce-back strength:** When the LED displays F-13, press "Confirm" to enter the adjustment of the strength of rebounding when encountering resistance, then press "Open" or "Close" to change it. The larger the value, the stronger the rebound when the boom meets resistance; the smaller the value, the weaker the rebound.

6. **Bounce-back time:** When the LED displays F-14, press "Confirm" to enter the adjustment of the rebound response to resistance, then press "Open" or "Close" to change it. The larger the value, the longer the reaction time of the rebound; the smaller the value, the shorter the rebound reaction time.

Note: adjusting F-13 or F-14 may cause misjudgment by the controller; it is not recommended to change the factory value of these two parameters.

7. **Angle to close loop sensor:** When the LED displays F-15, press "Confirm" to enter the adjustment of the rebound reaction when encountering resistance, then press "Open" or "Close" to adjust the angle value of loop sense shielding. The larger the value, the larger the loop sense shielding angle; the smaller the value, the smaller the shielding angle.

8. **Auto-close time without loop sensor:** When the LED displays F-16, press “Confirm” to enter the delay closing adjustment. 00 means that the delay closing function is turned off, and 01-99 represent the delay closing time in seconds when there is no loop sense. Set it according to your needs.

9. **Delayed closing with loop sensor:** When the digital tube displays F-40, press “Confirm” to enter the delayed closing adjustment. 00 means that the delayed closing function is turned off, and 01-99 represent the delayed closing time with loop sense. The time can be set according to your needs, in seconds.

10. **Open speed:** When the LED displays “F-21”, press “Confirm” to enter the opening speed adjustment, then press “Open” or “Close” to change it. The larger the value, the faster the opening speed; the smaller the value, the slower the speed.

11. **First deceleration angle during opening:** When the LED displays “F-23”, press “Confirm” to enter the adjustment of the first deceleration angle of the boom opening, then press “Open” or “Close” to change it. The larger the value, the larger the deceleration angle of the boom opening; the smaller the value, the smaller the opening deceleration angle.

12. **Deceleration speed during opening:** When the LED displays “F-25”, press “Confirm” to start setting, then press “Open” or “Close” to adjust the opening deceleration speed. The larger the value, the faster the opening deceleration speed; the smaller the value, the slower the opening deceleration speed.

13. **Close speed:** When the LED displays “F-26”, press “Confirm” to start setting, then press “Open” or “Close” to adjust the closing speed. The larger the value, the faster the speed; the smaller the value, the slower the speed.

14. **First deceleration angle during closing:** When the LED displays “F-28”, press “Confirm” to start setting, then press “Open” or “Close” to adjust the first deceleration angle during closing. The larger the value, the larger the angle; the smaller the value, the smaller the angle.

15. **Deceleration speed during closing:** When the LED displays “F-30”, press “Confirm” to start setting, then press “Open” or “Close” to adjust the closing deceleration speed. The larger the value, the faster the closing deceleration speed; the smaller the value, the slower the closing deceleration speed.

16. **Learning and deleting remote control codes:** To learn a remote control, press “Copy” until the LED displays “1” and press any button on the remote at the same time. Return to the menu interface after successful registration. To delete, press “Copy” for 5 seconds on the main interface until the LED displays 0000; all the registered remote controls will be deleted.

1. Using instructions

- Before use, make sure all wires are ok.
- Press open button, the boom will open to right position and stop.
- Press close button, the boom will close to right position and stop.
- During closing, if car pass the barrier. Press open, barrier will stop and open. Press stop, barrier will stop.
- Power off, use handle to open the boom. Power on, press close button, then the barrier can be used.

2. Maintenance

- Clean the housing surface regularly;
- Check wiring diagram regularly, if some wires loose, fix them back;
- keep the barrier in aeration-drying atmosphere to ensure the stability and working life;
- Check transmission shafts regularly, if loose, fix them back;
- Check spring regularly; ensure spring is in good situations.
- Check the connection between housing and grand regularly, ensure housing is well fixed.

1. Services items

- The warranty is 1 year
- Provide maintenance all the life time

Not included free maintenance under the damage of following situation

- Damages caused by wrong installation (please follow instruction)
- Using unstable power supply which beyond product's working range or not compliance with national electricity use safety standard
- Irresistible factors, like natural disasters
- Incorrect usage

2. Packing List

NO	Products	Unit	Quantity	NO	Products	Unit	Quantity
1	Box	pc	1	2	Boom support	pc	1
3	Push button	pc	1	4	Accessories box	pc	1
5	User manual	pc	1	6	Handle	pc	1
7	Certificate	pc	1	8	Remote control	pc	2
9	Key	pc	2	10			



Guarantee card

Customer		Tel	
Address			
Purchasing time		Model	

1. Please write your information carefully, only stamped guarantee card is valid;
2. Guarantee is 1 year;
3. Guarantee does not cover any problems caused by actions not following our user manual.