Ruijie OM-2.5G-SFP-10KM-SM1490 e-Lighten Optical Transceiver

Installation Guide

Document version: V1.0
Date: October 31, 2025
Copyright © 2025 Ruijie Networks

Copyright

Copyright © 2025 Ruijie Networks

All rights are reserved in this document and this statement.

Without the prior written consent of Ruijie Networks, no organization or individual is permitted to reproduce, extract, back up, modify, or distribute the content of this document in any manner or form. It is also prohibited to translate the document into other languages or use any or all parts of it for commercial purposes.

 and  trademarks are owned by Ruijie Networks.

All other trademarks or registered trademarks mentioned in this document are owned by their respective owners.

Disclaimer

The products, services, or features that you purchase are subject to commercial contracts and terms. It is possible that some or all of the products, services, or features described in this document may not be available for purchase or use. Unless agreed upon otherwise in the contract, Ruijie Networks does not provide any explicit or implicit statements or warranties regarding the content of this document.

The names, links, descriptions, screenshots, and any other information regarding third-party software mentioned in this document are provided for your reference only. Ruijie Networks does not explicitly or implicitly endorse or recommend the use of any third-party software and does not make any assurances or guarantees concerning the applicability, security, or legality of such software. You should choose and use third-party software based on your business requirements and obtain proper authorization. Ruijie Networks assumes no liability for any risks or damages arising from your use of third-party software.

The content of this document is subject to constant change due to product version upgrades or other reasons. Thus, Ruijie Networks reserves the right to modify the content of the document without prior notice or prompt.

This manual serves solely as a user guide. While Ruijie Networks endeavors to ensure the accuracy and reliability of the content when compiling this manual, it does not guarantee that the content of the manual is free of errors or omissions. All information contained in this manual does not constitute any explicit or implicit warranties.

Personal Data Statement

During the operation or troubleshooting of the products, services, or features you have purchased, certain personal data of users may be collected or used. Therefore, it is essential for you to establish and implement appropriate privacy policies, in compliance with the relevant laws and regulations of the applicable countries or regions, to ensure the complete protection of users' personal data.

If Ruijie Networks is involved in this process, we will strictly adhere to the relevant laws and regulations of the applicable countries or regions and take all necessary actions to safeguard users' personal data.

When discarding, reclaiming, or reusing a device, please ensure to back up or clear any stored data to avoid data leakage. For assistance, please contact our after-sales technical support.

Preface

Intended Audience

This document is intended for:

- Network engineers
- Technical support and servicing engineers
- Network administrators

Technical Support

- Ruijie Networks website: https://www.ruijie.com
- Online support center: https://www.ruijie.com/support
- Case portal: https://caseportal.ruijie.com
- Community: https://community.ruijie.com
- Email support: service_rj@ruijie.com
- Live chat: https://www.ruijie.com/rita
- Documentation feedback: doc@ruijie.com.cn

Conventions

1. Signs

The signs used in this document are described as follows:

Danger

An alert that contains important safety instructions. Before you work on any equipment, be aware of the hazards involved and be familiar with standard practices in case of accidents.

Warning

An alert that calls attention to important rules and information that if not understood or followed can result in data loss or equipment damage.

Caution

An alert that calls attention to essential information that if not understood or followed can result in function failure or performance degradation.

Note

An alert that contains additional or supplementary information that if not understood or followed will not lead to serious consequences.

Specification

An alert that contains a description of product or version support.

2. Notes

This manual provides installation steps, troubleshooting, technical specifications, and usage guidelines for cables and connectors. It is intended for users who want to understand the above and have extensive experience in network deployment and management, and assume that users are familiar with related terms and concepts.

Contents

Preface I

1 Overview 1

1.1 About the OM-2.5G-SFP-10KM-SM1490 1

1.2 Package Contents 1

1.3 Product Appearance 2

1.4 Hardware Specifications 2

2 Preparing for Installation 4

3 Installing the Device 5

3.1 Before You Begin 5

3.1.1 Precautions for Installation 5

3.1.2 Precautions for Removal 5

3.2 Installing the Optical Transceiver 5

3.3 Removing the Optical Transceiver 6

4 Appendix 8

4.1 PON Ports and SC Ports 8

1 Overview

1.1 About the OM-2.5G-SFP-10KM-SM1490

The e-Lighten Solution is a network product solution based on existing Ethernet technology integrating PON technology and passive optical splitting features. The components include:

- e-Lighten core switch (OLT): As a core switch, it has the Layer 3 data forwarding capability. It provides PON ports which can be connected to e-Lighten access switches and e-Lighten access points (APs) to achieve data interconnection.
- e-Lighten access switch (ONU): As an access device, the e-Lighten access switch is connected to the PON port at the uplink. It can send data to the core switch through the splitter.
- e-Lighten AP (ONU): An e-Lighten AP is connected to the PON port at the uplink, and can send wireless users' Internet access data to the core switch through the splitter.
- Optical distribution network (ODN): The ODN, consisting of splitters, is connected to the core switch at the uplink and to e-Lighten access switches or APs at the downlink.

Figure 1-1 Topology Diagram of e-Lighten Solution

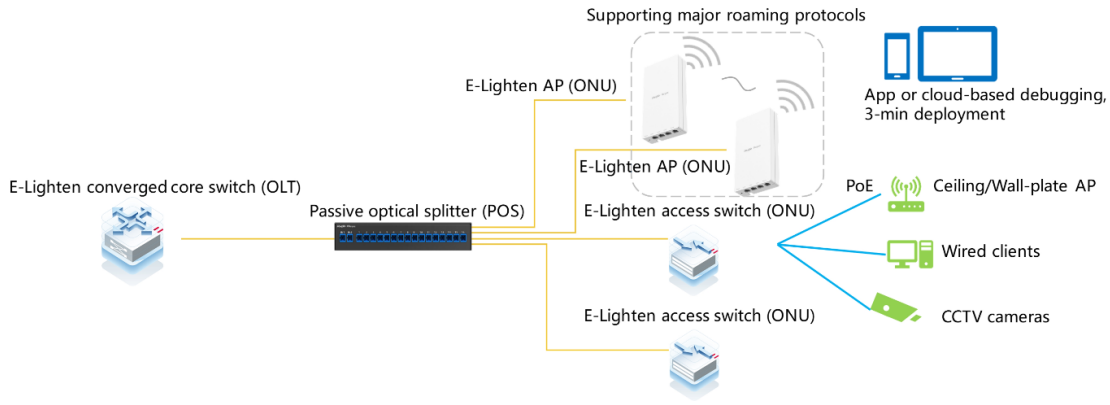

The OM-2.5G-SFP-10KM-SM1490 is a 2.5G e-Lighten optical transceiver launched by Ruijie for all-optical local area networks. Featuring a single-mode, single-fiber design and a maximum transmission distance of 10 km (6.21 miles), this optical transceiver is ideal for a wide range of applications in small and medium-sized business environments. It effectively meets the networking needs of ELV campus networks, office spaces, hotels, residences, and small to medium-sized enterprises (SMEs).

1.2 Package Contents

Table 1-1 Package Contents

No.	Item	Quantity
1	Optical transceiver	1

Note

The package contents are subject to the purchase contract, and actual delivery may vary. Please check the items carefully against the package contents or purchase contract. If you have any questions, please contact your distributor.

1.3 Product Appearance



1.4 Hardware Specifications

Table 1-2 Hardware Specifications

Specification	Min. Value	Max. Value	Unit
Operating Voltage	3.14	3.46	V
Power Consumption	N/A	1	W
Operating Temperature (Case Temperature)	0	70	°C
Operating Humidity	5	85	%
Tx Wavelength	1480	1500	nm
Rx Wavelength	1290	1330	nm
Average Tx Power	3	7	dBm
Overload Rx Power	N/A	–12	dBm
Receiver Sensitivity	–32	N/A	dBm

Specification	Min. Value	Max. Value	Unit
Tx Rate	N/A	1.25	Gbps
Rx Rate	N/A	1.25	Gbps

2 Preparing for Installation

To prevent damage to the optical transceivers, cables, or electronic components in the device caused by static electricity during installation, take anti-static measures before installation. Wear an ESD wrist strap, tighten the buckle, ensure that the ESD wrist strap is in good contact with your skin, and verify that the ESD wrist strap is properly grounded.

The following figure shows how to wear an ESD wrist strap.

Figure 2-1 Wrist Strap

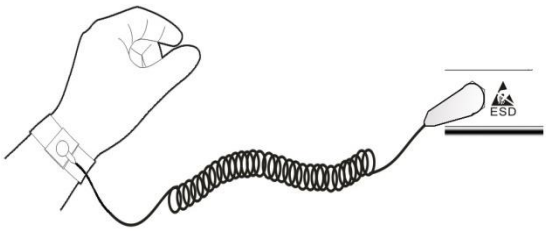

If you have ESD gloves, wear them before installing the optical transceiver or cable, and then wear the ESD wrist strap. Ensure that the ESD wrist strap is in good contact with the ESD glove.

3 Installing the Device

Caution

Before installing the device, ensure that guidelines and requirements in Chapter 2 have been met.

3.1 Before You Begin

3.1.1 Precautions for Installation

- Do not remove the protective rubber plug from the optical port of the optical transceiver before connecting the optical cable.
- Do not insert an optical transceiver with an optical cable into a slot. Remove the optical cable before installing the optical transceiver.
- Handle the optical transceiver carefully and slowly during installation and removal. Do not touch the edge connector of the optical transceiver with your hands.
- Before inserting an optical transceiver, check whether the optical transceiver is correctly inserted into the port. Ensure that the optical transceiver is not misaligned or offset, and then push the optical transceiver into place.
- Do not look directly into the optical port when the optical transceiver is working normally to protect your eyes from laser beams.
- Do not squeeze, bend, or fold the optical cable, which may cause system performance to deteriorate or data loss.

3.1.2 Precautions for Removal

- Remove the optical cable before removing the optical transceiver.
- If an optical transceiver with a handle is installed, do not forcibly remove the optical transceiver before you release the handle. Otherwise, the optical transceiver may be damaged.
- Once the optical transceiver is removed, promptly cover the optical ports of the optical transceiver and the device with dust plugs to keep dust out.

3.2 Installing the Optical Transceiver

(1) Flip up the handle of the optical transceiver to lock the latching tab at the top of the optical transceiver. Hold the optical transceiver by its two sides and gently push it into the optical transceiver slot until it is firmly seated in the slot (a click sound will be heard when the optical transceiver is properly seated), as show in the following figure.

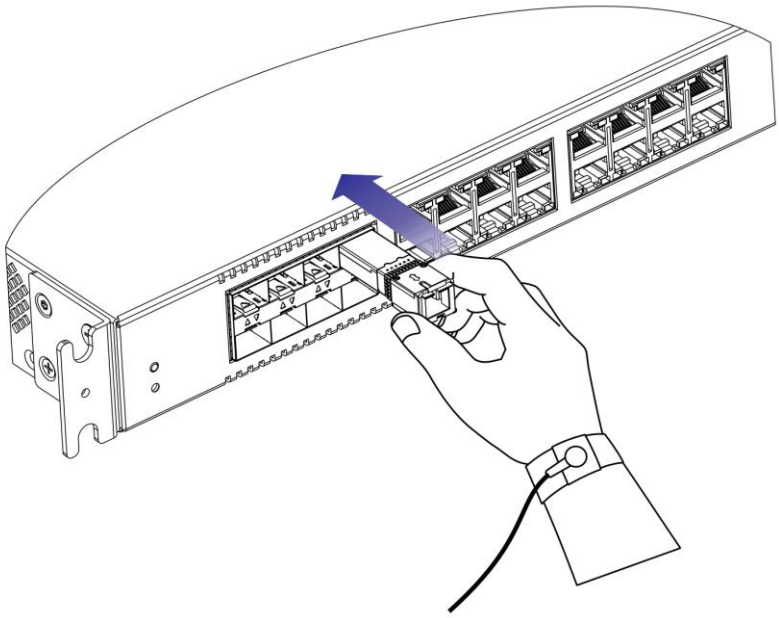

(2) Connect the optical transceiver to the optical network using a patch cable. Use a patch cable with a port that matches the interface type of the interconnection port.

(3) After the patch cable is plugged into the optical transceiver, the LINK/ACT LED on the switch turns on. If the LED is off, verify that the optical cable is properly connected.

Caution

- Based on the Rx optical power, when a short-distance single-mode optical cable is used, an optical attenuator or splitter need to be added to the link to prevent damage to the optical transceiver.
- Do not insert the optical transceiver in the wrong direction. If the optical transceiver cannot be inserted in place, try installing it in another direction.

3.3 Removing the Optical Transceiver

(1) Remove the optical cable.

(2) Pull the handle of the optical transceiver downward to the horizontal position, and then gently pull the handle to remove the optical transceiver, as shown in the following figure.

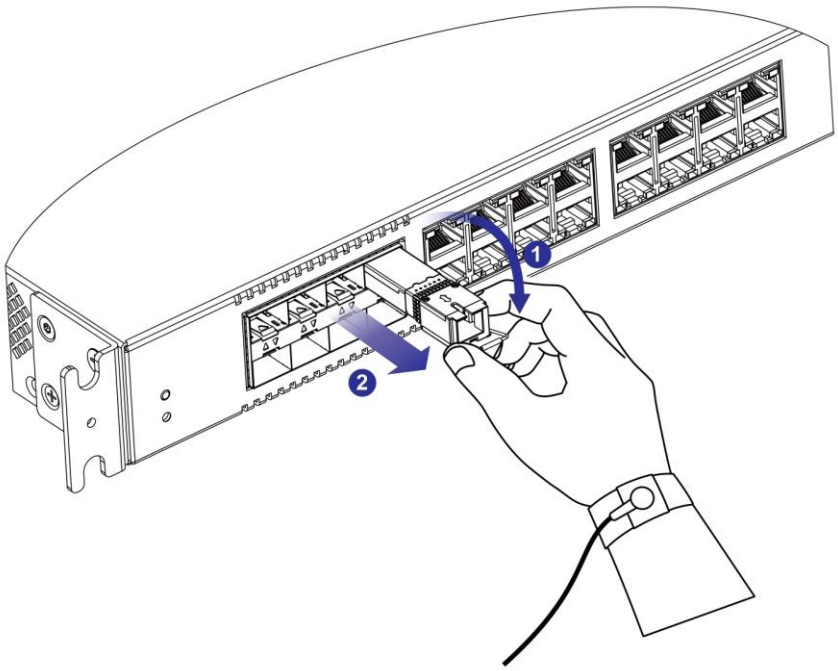
1
2

4 Appendix

4.1 PON Ports and SC Ports

Figure 4-1 shows the PON ports and SC ports on equipment in Ruijie e-Lighten Optical Solution.

- PON ports on the OLT require e-Lighten optical transceivers with SC/UPC connectors, which are connected to an optical splitter using single-mode fiber.
- SC ports on optical splitters and ONUs use SC/UPC connectors, and are interconnected using single-mode fiber.

Figure 4-1 PON Port and SC Port Connections

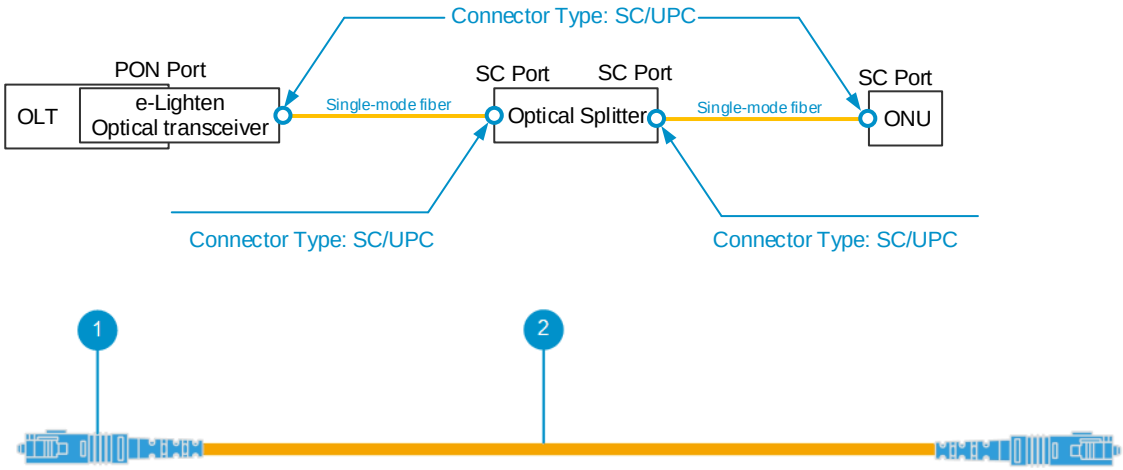

No	Description
1	SC/UPC connector
2	Single-mode fiber