Ruijie Reyee RG-NBF5200M-8FS16GT4XS e-Lighten Core Switch

Installation Guide

Document Version: V1.0
Date: July 8, 2024
Copyright © 2024 Ruijie Networks

Copyright

Copyright © 2024 Ruijie Networks

All rights are reserved in this document and this statement.

Without the prior written consent of Ruijie Networks, any organization or individual shall not reproduce, extract, back up, modify, or propagate the content of this document in any manner or in any form, or translate it into other languages or use some or all parts of the document for commercial purposes.

 and other Ruijie networks logos are trademarks of Ruijie Networks.

All other trademarks or registered trademarks mentioned in this document are owned by their respective owners.

Disclaimer

The products, services, or features you purchase are subject to commercial contracts and terms, and some or all of the products, services, or features described in this document may not be available for you to purchase or use. Except for the agreement in the contract, Ruijie Networks makes no explicit or implicit statements or warranties with respect to the content of this document.

The names, links, descriptions, screenshots, and any other information regarding third-party software mentioned in this document are provided for your reference only. Ruijie Networks does not explicitly or implicitly endorse or recommend the use of any third-party software and does not make any assurances or guarantees concerning the applicability, security, or legality of such software. You should choose and use third-party software based on your business requirements and obtain proper authorization. Ruijie Networks assumes no liability for any risks or damages arising from your use of third-party software.

The content of this document will be updated from time to time due to product version upgrades or other reasons, Ruijie Networks reserves the right to modify the content of the document without any notice or prompt.

This manual is designed merely as a user guide. Ruijie Networks has tried its best to ensure the accuracy and reliability of the content when compiling this manual, but it does not guarantee that the content of the manual is completely free of errors or omissions, and all the information in this manual does not constitute any explicit or implicit warranties.

Preface

Intended Audience

This document is intended for:

- Network engineers
- Technical support and servicing engineers
- Network administrators

Technical Support

- The official website of Ruijie Reyee: https://reyee.ruijie.com
- Technical Support Website: https://reyee.ruijie.com/en-global/support
- Case Portal: https://www.ruijienetworks.com/support/caseportal
- Community: https://community.ruijienetworks.com
- Technical Support Email: service_rj@ruijienetworks.com
- Online Robot/Live Chat: https://reyee.ruijie.com/en-global/rita

Conventions

1. Signs

This document also uses signs to indicate some important points during the operation. The meanings of these signs are as follows:

Caution

An alert that calls attention to safety instruction that if not understood or followed can result in personal injury.

Warning

An alert that calls attention to important rules and information that if not understood or followed can result in data loss or equipment damage.

Note

An alert that calls attention to essential information that if not understood or followed can result in function failure or performance degradation.

Instruction

An alert that contains additional or supplementary information that if not understood or followed will not lead to serious consequences.

Specification

An alert that contains a description of product or version support.

2. Note

This manual provides installation steps, troubleshooting, technical specifications, and usage guidelines for cables and connectors. It is intended for users who want to understand the above and have extensive experience in network deployment and management, and assume that users are familiar with related terms and concepts.

Contents

Preface I

1 Overview 1

1.1 About the RG-NBF5200M-8FS16GT4XS 1

1.2 Package Contents 1

1.3 Product Appearance 2

1.4 Hardware Specifications 4

1.5 Cooling 5

2 Preparing for Installation 7

2.1 Safety Guidelines 7

2.1.1 General Precautions 7

2.1.2 Chassis-Lifting Guidelines 7

2.1.3 Electricity Safety 7

2.1.4 Preventing ESD Damage 8

2.1.5 Laser Safety 8

2.2 Site Requirements 9

2.2.1 Floor Loading 9

2.2.2 Airflow 9

2.2.3 Space 9

2.2.4 Temperature and Humidity 9

2.2.5 Cleanliness 10

2.2.6 Grounding 11

2.2.7 Anti-Electromagnetic Interference 11

2.2.8 Surge Protection 11
2.2.9 EMI 12
2.2.10 Installation Site 12
2.3 Rack Requirements 12
2.4 Tools 13
3 Installing the Device 14
3.1 Installation Precautions 14
3.2 Installing the Device 14
3.2.1 Installing the Device in the Cabinet 14
3.2.2 Installing the Device on a Workbench 15
3.3 Connecting the Grounding Cable 17
3.4 Connecting the Power Cord 17
1.2 Checklist After Installation 17
4 Logging in to the Web Page 18
5 FAQs 19
5.1 Troubleshooting Flowchart 19
5.2 Common Faults 19
6 Appendix 21
6.1 Ports, Connectors, and Media 21
6.1.1 1000BASE-T/100BASE-TX/10BASE-T Ports 21
6.1.2 SFP Ports and SFP+ Ports 22
6.1.3 PON Ports and SC Ports 22
6.2 SFP and SFP+ Transceiver Modules 23
6.2.1 SFP Transceiver Modules 23

6.2.2 SFP+ Transceiver Modules....27
6.3 Surge Protection....30
6.3.1 Installing an AC Power Lightning Arrester....30
6.3.2 Installing an Ethernet Port Lightning Arrester....31
6.4 Recommended Cabling....33
6.4.1 Requirements for the Minimum Bend Radius of an Ethernet Cable....33
6.4.2 Requirement for the Minimum Bend Radius of an Optical Cable....33
6.4.3 Precautions for Bundling up Cables....33
6.5 Site Selection....36
6.6 Cleaning the Connectors and End Faces of Optical Cables....37

1 Overview

1.1 About the RG-NBF5200M-8FS16GT4XS

The Reyee e-Lighten Solution is a network product solution based on existing Ethernet technology integrating PON technology and passive optical splitting features. The components include:

- e-Lighten core switch (OLT): As a core switch, it has the Layer 3 data forwarding capability. It provides PON ports which can be connected to e-Lighten access switches and e-Lighten access points (APs) to achieve data interconnection.
- e-Lighten access switch (ONU): As an access device, the e-Lighten access switch is connected to the PON port at the uplink. It can send data to the core switch through the splitter.
- e-Lighten AP (ONU): An e-Lighten AP is connected to the PON port at the uplink, and can send wireless users' Internet access data to the core switch through the splitter.
- Passive optical distribution network (ODN): The ODN, consisting of splitters, is connected to the core switch at the uplink and to e-Lighten access switches or APs at the downlink.

Figure 1-1 Topology Diagram of Reyee e-Lighten Solution

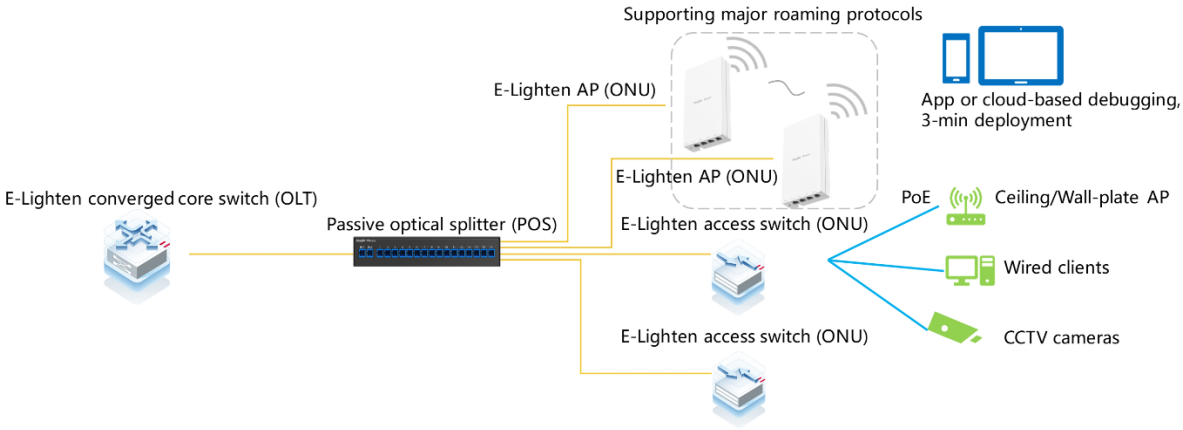

The RG-NBF5200M-8FS16GT4XS switch, a core switch (OLT) launched by Ruijie Reyee, is designed for passive all-optical local area networks (LANs). The series switches adopt an efficient hardware architecture, provide larger entry specifications, faster hardware processing performance, and more convenient operation experience. It is applicable for diverse applications in small and medium-sized business environments, and can effectively cater to the needs of ELV campus networks, office spaces, hotels, residences, and small to medium-sized enterprises.

1.2 Package Contents

Note

The package contents are subject to the purchase contract, and actual delivery may vary. Please check the items carefully against the package contents or purchase contract. If you have any questions, please contact your distributor.

Table 1-1 Package Contents

No.	Item	Quantity
1	RG-NBF5200M-8FS16GT4XS switch	1
2	Rubber pad	4
3	Mounting bracket	2
4	Black power cord (1.5 m or 4.92 ft.)	1
5	Grounding cable	1
6	M4 x 80 mm cross recessed countersunk screw	8
7	Dust plug	12
8	Power cord retainer clip	1
9	User Manual	1
10	Warranty card	1

1.3 Product Appearance

Figure 1-2 shows the product appearance.

Figure 1-2 Front View of the RG-NBF5200M-8FS16GT4XS



Figure 1-3 Front Panel of the RG-NBF5200M-8FS16GT4XS

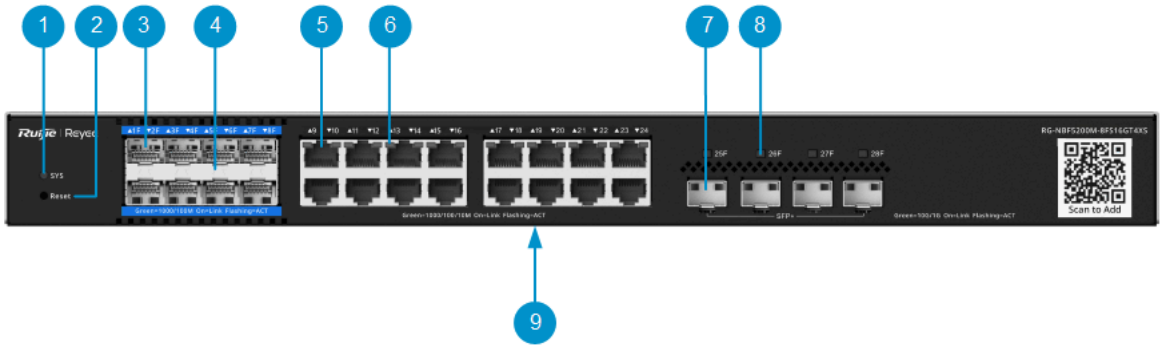

Table 1-2 Components on the Front Panel of the RG-NBF5200M-8FS16GT4XS

No.	Component	Description
1	SYS LED	● Solid green: the switch is working properly. ● Blinking green (fast blinking: on for 0.0625s and off for 0.0625s): the switch is starting up. ● Blinking green (medium frequency: on for 0.25s and off for 0.25s): the device restores factory settings. ● Blinking green (slow blinking: on for 2s and off for 0.25s): the device is not connected to Ruijie Cloud. ● Blinking yellow (on for 1s and off for 1s): the temperature reaches the warning value, the temperature cannot be read, or other non-fatal problems occur, causing performance loss. ● Blinking red (one long pulse and three short pulses: on for 1s, off for 1s, on for 0.25s, off for 0.25s, on for 0.25s, off for 0.25s, on for 0.25s, and off for 1.75s, in a cycle): the main program is lost or damaged, other hardware is faulty, or a specific function is abnormal. ● Off: the device is not powered on.
2	Reset button	● Press and hold for no more than two seconds: restart the switch ● Press and hold for two to five seconds: no action ● Press for more than 5s: the SYS LED blinks. Logs are collected, the username and password are reset, and the device is restarted. After the device is restarted, select whether to restore factory settings on the web page or in the app. After you restore factory settings, the default management address is http://10.44.77.200 (default password: admin).
3	SFP/PON optical port	1000BASE-X/100BASE-FX and PON optical port
4	SFP/PON optical port LED	● Blinking green: the port is receiving or sending data. ● Solid green: the port is connected but not receiving or sending data. ● Off: the port is not connected or no device is successfully registered when the optical splitting function is enabled.
5	RJ45 port	10/100/1000BASE-T port
6	RJ45 port LED	● Blinking green: the port is receiving or sending data. ● Solid green: the port is connected but not receiving or sending data. ● Off: the port is not connected.
7	SFP+ port LED	● Blinking green: the port is receiving or sending data. ● Solid green: the port is connected but not receiving or sending data. ● Off: the port is not connected.
8	SFP+ port	10GE SFP+ and 1GE SFP transceivers, supporting hot swapping
9	Label	Bottom of the device

Figure 1-4 Rear Panel of the RG-NBF5200M-8FS16GT4XS

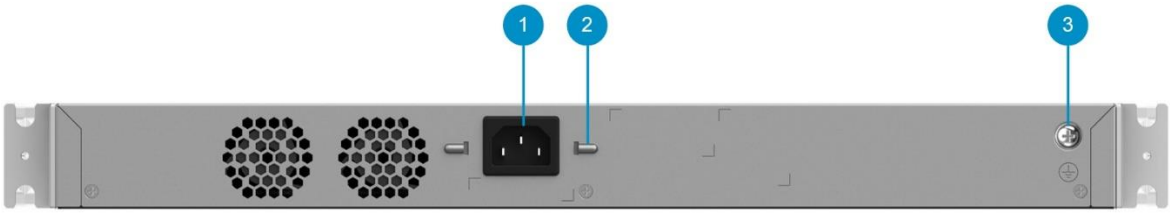

Table 1-3 Components on the Rear Panel of the RG-NBF5200M-8FS16GT4XS

No.	Component	Description
1	Power connector	Connects to an external AC power supply.
2	Power cord retention clip	Secures the power cord.
3	Grounding stud	Secures the grounding lug to connect the chassis to earth ground.

1.4 Hardware Specifications

Table 1-4 Hardware Specifications of the RG-NBF5200M-8FS16GT4XS

Model	**RG-NBF5200M-8FS16GT4XS**
CPU	Built-in CPU, dual-core MIPS processor, CPU clock speed of 1 GHz
Boot ROM	N/A
Flash Memory	256 MB
SDRAM	DDRIII 1 GB
Port	● 8 x 100M/1000M SFP/PON combo ports ● 16 x 10/100/1000BASE-T ports ● 4 x 1GE/10GE SFP+ ports
Supported Optical Transceiver and Cable Types	See Appendix B. DAC cables are not supported. The supported module types may update without prior notification. Please contact Ruijie Networks for details.
LED	SYS LED and Link/ACT LED
Maximum Power	60 W
PoE	Not supported
EEE	Supported
Temperature Alarm	Supported

Fan	2 (automatic speed adjustment)
Power Module	AC input: ● Rated voltage range: 100 V AC to 240 V AC ● Max. voltage range: 90 V AC to 264 V AC ● Frequency: 50 Hz to 60 Hz ● Operating current ≤ 2 A
Leakage Current to Ground	≤ 3.5 mA
Operating Altitude	≤ 5,000 m (16,404.19 ft.)
Operating Temperature	0ºC to 50ºC (32ºF to 122ºF)
Storage Temperature	–40ºC to +70ºC (–40ºF to +158 ºF)
Operating Humidity	10% to 90% RH (non-condensing)
Storage Humidity	5% to 95% RH (non-condensing)
Port Surge Protection	6 kV
Certification	CE
Dimensions (W x D x H)	440 mm x 260 mm x 43.6 mm (17.32 in. x 10.24 in. x 1.72 in.)
Weight	4.68 kg (10.30 lbs.)

Warning

Operation of this equipment in a residential environment could cause radio interference.

1.5 Cooling

The RG-NBF5200M-8FS16GT4XS adopts the cooling design of air intake from the left and front panels and air exhaust from the rear panel to ensure that the device can work properly in the specified environment. A minimum clearance of 100 mm (3.94 in.) must be maintained around the device to ensure proper ventilation. Dust the device every three months to avoid blocking the ventilation openings on the housing.

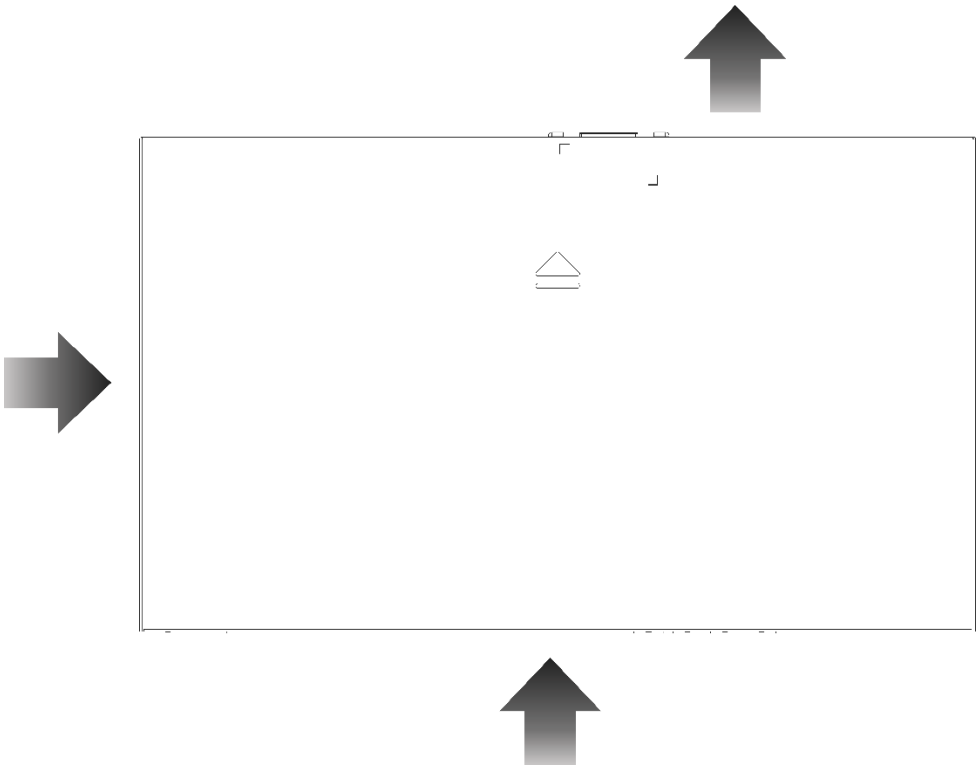

Note

Maintain a minimum clearance of 1 RU (44.45 mm) between the switch and its neighboring device to ensure proper ventilation.

2 Preparing for Installation

2.1 Safety Guidelines

Note

- To avoid personal injury or equipment damage, review the safety guidelines in this chapter before you begin the installation.
- The following safety guidelines may not include all the potentially hazardous situations.

2.1.1 General Precautions

- Do not place the equipment in a wet area, and keep it away from liquid. Keep the chassis clean and dust-free.
- Keep the equipment away from heat sources.
- For the equipment that is installed in a cabinet, ensure that the cabinet and power distribution system are properly grounded.
- Do not place the equipment in walking areas.
- During installation and maintenance, do not wear loose clothing, jewelry, or any other objects that may hook onto the chassis.
- Do not place tools and accessories in walking areas.

2.1.2 Chassis-Lifting Guidelines

- Avoid moving the equipment frequently.
- Turn off all power supplies and disconnect all power cords before lifting or moving the equipment.
- Two or more people are required to lift the chassis. Keep balance and prevent personal injuries when lifting or moving the equipment.

2.1.3 Electricity Safety

CAUTION：DOUBLE POLE/NEUTRAL FUSING

Electric shock hazard！The fuse may be in the neutral, and that the mains shall be disconnected to de-energize the phase conductors.

- Observe local regulations and specifications when performing electrical operations. Only qualified personnel should handle these tasks.
- Any improper electrical operation can lead to accidents such as fires or electric shocks, causing severe, or even fatal damage to the human body and the equipment.
- Carefully check the work area for potential hazards, including ungrounded power system, insufficient grounding, and damp or wet ground.
- Direct or indirect touch through a wet object on high-voltage and mains supply can bring a fatal danger.

- Locate the emergency power supply switch in the room before installation. In the case of an accident, cut off the power supply immediately.
- Carefully inspect the equipment and the environment before powering on or off the equipment.
- Select the right leakage protector (also called “leakage current switch” or “leakage current breaker”) for the power supply system. This equipment automatically disconnects the power supply in the event of leakage and the risk of electric shock. A leakage protector should meet the following requirements:
  - The rated leakage action current of each leakage protector is greater than twice of the theoretical maximum leakage current of all the power supplies in the system. For example, if a system is equipped with 16 identical power supplies, and the leakage current of each power supply is equal to or less than 3.5 mA, then the leakage current of the system totals 56 mA. A leakage protector with a rated leakage action current of 30 mA supports no more than four power supplies (that is, action current of the leakage protector/2/Maximum leakage current of each power supply = 30/2/3.5 ≈ 4.28). In this case, 16 power supplies in the system require at least four leakage protectors with a rated action current of 30 mA, with each leakage protector supporting four power supplies. Although the number of power supplies in a system differs in models, the rated leakage action current of each leakage protector divided by two must be greater than the sum of the maximum leakage current of all the power supplies.
  - The rated leakage non-action current of a leakage protector should be 50% of the leakage action current. If the non-action current value is too small, the high sensitivity level can cause the circuit to break, leading to power cutoff and service interruption, even if the leakage current value is normal. For example, if a leakage protector has a rated leakage action current of 30 mA, the rated leakage non-action current should be 15 mA. The leakage protector will not activate unless the leakage current exceeds 15 mA.

Caution

- To ensure personal safety, each leakage protector in the system must have a rated leakage action current equal to or below 30 mA, which is the recognized safety threshold for human body current. If the total leakage current of the system exceeds twice the 30 mA limit, the system must be equipped with two or more leakage protectors to maintain safety.
- The leakage current values vary with products. For the leakage current value of each product model, see the product technical specifications.

2.1.4 Preventing ESD Damage

- Properly ground both the equipment and the installation site.
- Keep the site as dust free as possible.
- Maintain appropriate humidity conditions.
- Before installing or maintaining the equipment, wear an anti-ESD wrist strap and make sure that it is properly grounded.
- Avoid contact between the printed circuit boards and clothing. The anti-ESD wrist strap only protects the printed circuit boards from ESD voltages on the body. ESD voltages on clothing can still cause damage.

2.1.5 Laser Safety

An equipment with an optical port usually supports multiple types of optical transceivers, all of which are Class I laser products. Pay attention to the following during the use of optical transceivers:

- When an optical transceiver is in operation, ensure that its port is connected to an optical fiber or covered by

a dust cap to keep out dust and prevent it from burning your eyes.

- When an optical transceiver is in operation, do not look into its port after removing the optical fiber. Doing so may result in eye injury.

Caution

Do not approach or look directly into any optical port under any circumstances. This may cause permanent damage to your eyes.

Figure 2-1 Laser Product Warning



2.2 Site Requirements

To ensure the normal operation and prolonged service life of the equipment, it is essential to install it indoors in a location that meets the following requirements.

2.2.1 Floor Loading

Assess the combined weight of the equipment and its accessories, including the cabinet, chassis, and power supply, and verify that the installation site meets the necessary specifications.

2.2.2 Airflow

To ensure that the equipment works properly in the specified environment, a minimum clearance of 100 mm (3.94 in.) must be maintained around the equipment to ensure proper ventilation. Manage the Ethernet cables and power cords using cable ties or cable management brackets to avoid blocking air intakes. You are advised to dust the equipment at an interval of three months to avoid blocking the ventilation openings.

2.2.3 Space

Ensure that indoor pathways are at least 0.8m (31.50 in.) wide to allow for proper chassis handling and module swapping.

Maintain a minimum clearance of 0.4m (15.75 in.) around the equipment for heat dissipation and equipment maintenance.

2.2.4 Temperature and Humidity

For optimal equipment performance and extended service life, it is essential to maintain ambient temperature and humidity conditions. Prolonged exposure to excessively high or low temperature and humidity can potentially cause damage to the equipment.

- When exposed to high relative humidity, insulating materials may exhibit poor insulation capabilities, increasing the risk of electrical leakage. Furthermore, high humidity can cause mechanical changes in materials and corrosion of metallic components.
- When exposed to low relative humidity, the insulating strip may dry out and shrink, increasing the risk of static

electricity generation. This static electricity can pose a danger to the circuits inside the equipment.

- In a dry environment, static electricity is prone to occur and damage the internal circuits of the equipment.
- High temperature environments can be detrimental to the equipment, leading to reduced performance and a shorter service life. Prolonged exposure to elevated temperatures can expedite the equipment's aging process.

Note

The ambient temperature and humidity of the equipment are measured 1.5 m (59.06 in.) above the floor and 0.4 m (15.75 in.) before the equipment rack when there is no protective plate in front or at the back of the rack.

2.2.5 Cleanliness

Dust poses a major threat to the running of the equipment. The buildup of dust on the equipment can result in static electricity, causing poor contact between the metallic joints. Dust buildup is more likely to occur in environments with low relative humidity, which not only impacts the service life of the equipment but also increases the likelihood of communication failure. The following table shows the specifications for dust concentration and particle size in the equipment room.

Table 2-1 Requirements for Dust

Particle Size	Unit	Concentration
≥ 0.5 μm	Particles/m^3	≤ 3.5×10^6
≥ 5 μm	Particles/m^3	≤ 3.5×10^4

Apart from dust, the salt, acid, and sulfide in the air of the machine room must also meet strict requirements. These harmful substances will accelerate metal corrosion and component aging. Therefore, the machine room should be properly protected against the intrusion of harmful gases, such as sulfur dioxide, hydrogen sulfide, nitrogen dioxide, and chlorine gas. The following table lists limits for harmful gases.

Table 2-2 Requirements for Gases

Gas	Average (mg/m^3)	Maximum (mg/m^3)
Sulfur dioxide (SO_2)	0.3	1.0
Hydrogen sulfide (H_2S)	0.1	0.5
Nitrogen dioxide (NO_2)	0.5	1.0
Chlorine gas (Cl_2)	0.1	0.3

Note

"Average" indicates the typical level of exposure over a one-week period. "Maximum" refers to the highest allowable exposure level within a week, with this level being sustainable for no more than 30 minutes per day.

2.2.6 Grounding

A proper grounding system is crucial for ensuring stable and reliable operation of the equipment, as well as preventing lightning strikes and interference. To ensure proper grounding, carefully check the grounding conditions at the installation site according to the grounding specifications, and complete grounding properly based on the actual situation.

- Safety Grounding

Ensure that the installation site and power distribution system are securely grounded if the equipment uses the AC power supply. Failure to do so may result in an increased risk of electric shock, particularly when the insulation resistance between the power module and the chassis decreases.

⚠ Caution

- Adopt grounding protection connections in buildings so that the equipment can be connected to the protective grounding system.
- Verify that the AC socket is reliably connected to the protective grounding system of the building. If not, a protective grounding wire should be used to connect the protective grounding lug of the AC socket to the protective grounding system of the building.
- The cross-sectional area of the protective grounding wire should be at least 0.75 mm2 (18 AWG).

- Lightning Grounding

The lightning protection system of facilities is standalone, and is composed of a lightning rod, a down conductor, and a connector connected to the grounding system. The grounding system is usually used for power reference grounding and safety grounding of the installation site. Lightning grounding is required only for facilities and is not required for the equipment.

- EMC Grounding

Grounding required for electromagnetic compatibility includes shielded grounding, filter grounding, noise and interference suppression, and level reference, which contribute to the overall grounding requirements. The grounding resistance should be smaller than 1 ohm, and the grounding terminals of the rack should be grounded before the running of the equipment.

2.2.7 Anti-Electromagnetic Interference

- Take effective measures to prevent interference from power grid to the power supply system.
- Keep the equipment away from the grounding system or lightning protection grounding system of the power facility.
- Keep the equipment far away from high-frequency current equipment such as high-power radio transmitting stations and radar launchers.
- Take electromagnetic shielding measures when necessary.

2.2.8 Surge Protection

- Ensure that the neutral point of the AC power socket is in good contact with the ground.
- Install a power arrester in front of the power input end to enhance surge protection for the power supply.
- When an AC power cord is introduced from outdoors and directly connected to the power port of the equipment, the AC power port must be connected to an external lightning protection power strip to protect the equipment against lightning strokes. Connect the mains supply AC power cord to the lightning protection

power strip, and then connect the equipment to the lightning protection power strip. This prevents high-voltage lightning from directly passing through the equipment over the mains supply AC power cord.

Note

- The lightning protection power strip is not delivered with the equipment. Purchase it as required.
- For details on how to use the lightning protection power strip, see the related user guide.

2.2.9 EMI

All interference sources, either from outside or inside of the equipment or application system, affect the equipment by capacitive coupling, inductive coupling, or electromagnetic waves. Electromagnetic interference (EMI) occurs due to electromagnetic radiation or conduction, depending on the transmission path. When the energy, often RF energy, from a component arrives at a sensitive component through the space, the energy is known as radiated interference. The interference source can be either a part of the interfered system or a completely electrically isolated unit. Conduction interference occurs when interference is transferred from one unit to another unit through cables, which are usually electromagnetic wires or signal cables connected between the source and the sensitive component. Conduction interference often affects the power supply of the equipment, but can be controlled by a filter. Radiated interference may affect any signal path in the equipment, and is difficult to shield.

- Take interference prevention measures for the power supply system.
- Keep the equipment away from the grounding system or lightning protection grounding system of the power facility.
- Keep the equipment far away from high-frequency current equipment such as high-power radio transmitting stations and radar launchers.
- Take electromagnetic shielding measures when necessary.

2.2.10 Installation Site

Regardless of whether the equipment is installed in a rack, on a workbench or on a wall, the following conditions must be met:

- Maintain a proper clearance around air vents for heat dissipation.
- The equipment is equipped with fans to draw air from front and left and right sides to rear. Maintain a minimum clearance of 150 mm (5.91 in.) around the ventilation openings for heat dissipation. Install the equipment in a standard 19-inch rack, or place it on a clean workbench. In hot areas, air-conditioning is recommended.
- The installation site has good cooling and ventilation.
- The installation site is sturdy enough to support the weight of the equipment and its accessories.
- The installation site is properly grounded.

2.3 Rack Requirements

If you plan to install the equipment in a rack, ensure that the rack meets the following conditions.

(1) Use a four-post 19-inch cabinet.

(2) The left and right square-hole rack posts are 465 mm (18.31 in.) apart.

Figure 2-2 19-Inch Rack

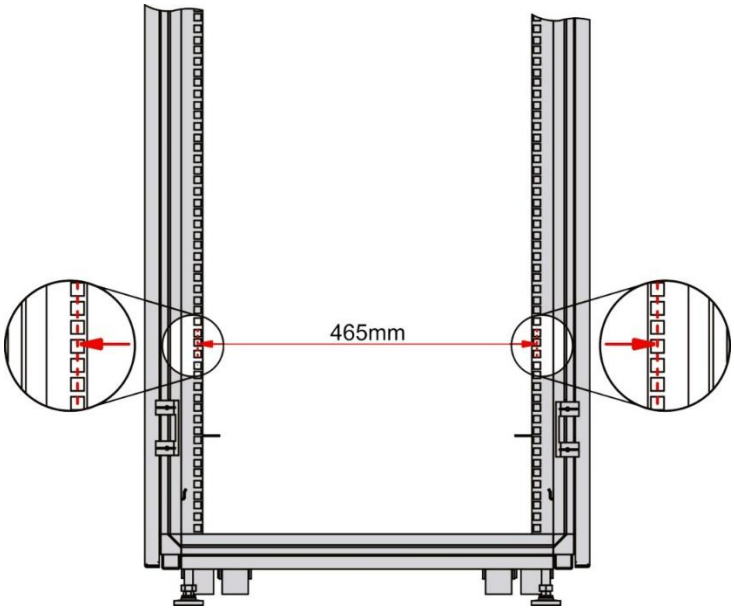

(3) The square-hole rack post is at least 180 mm (7.09 in.) from the front door, and the front door is at most 25 mm (0.98 in.) thick. This ensures an available clearance of at least 155 mm (6.10 in.). The rack depth (distance between front and rear doors) is at least 1000 mm (39.37 in.).

(4) The guide rails can bear the weight of the equipment and its accessories.

(5) The cabinet has a reliable grounding terminal for the chassis to connect to earth ground.

(6) The cabinet has a good ventilation system. The open area of front and rear doors is greater than 50%.

2.4 Tools

Table 2-3 Tools

Common Tools	Phillips screwdriver, power cords, Ethernet cables, cage nuts, diagonal pliers, and cable ties
Special Tools	Anti-ESD gloves, wire stripper, crimping plier, RJ45 crimping plier, and wire cutter
Meters	Multimeter

Note

The equipment is delivered without a toolkit. Prepare the preceding tools by yourself.

3 Installing the Device

Caution

Before installing the device, ensure that guidelines and requirements in Chapter 2 have been met.

3.1 Installation Precautions

- Pay attention to the following during installation:
- Connect the power cords of different colors to the corresponding cable terminals.
- Ensure that the connector of the power cord is properly seated in the power port of the switch.
- Do not place any objects above the device.
- Maintain a minimum clearance of 100 mm (3.94 in.) around the device to ensure proper airflow. Do not stack switches.
- Keep the device away from high-power radio transmitting stations, radar transmitting stations, and high-frequency high-current devices. If necessary, use electromagnetic shielding methods, such as electromagnetic shielding for interface cables.
- Manage Ethernet cables with a distance of 100 meters (328.08 ft.) indoors. Take surge protection measures if Ethernet cables need to be routed outdoors.

3.2 Installing the Device

3.2.1 Installing the Device in the Cabinet

The device meets the EIA standard size and can be installed in a standard 19-inch cabinet.

(1) Use eight M4 x 8 mm screws to fix the mounting brackets to the left and right sides of the device.

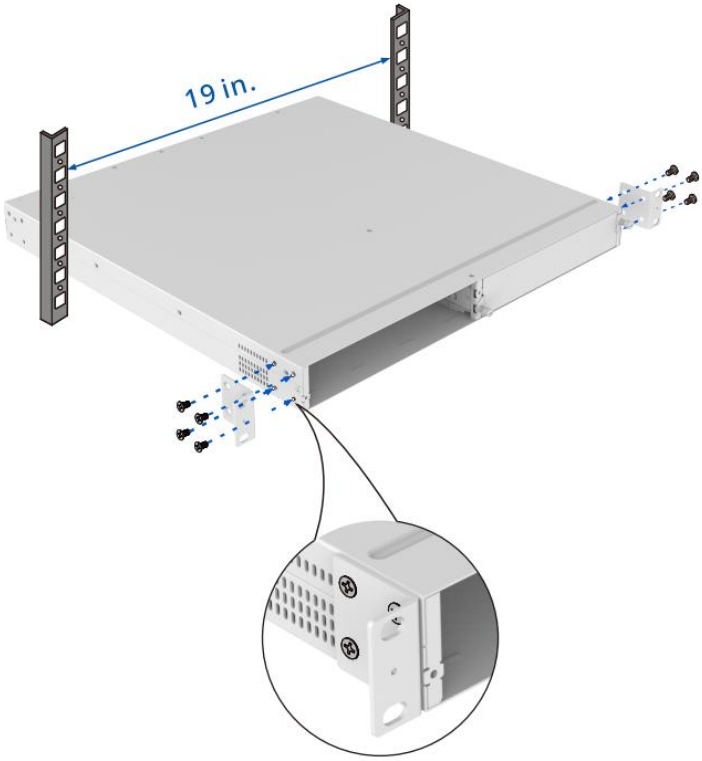

(2) Place the device horizontally in the cabinet and secure it to the cabinet using the M6 screws and matching cage nuts.

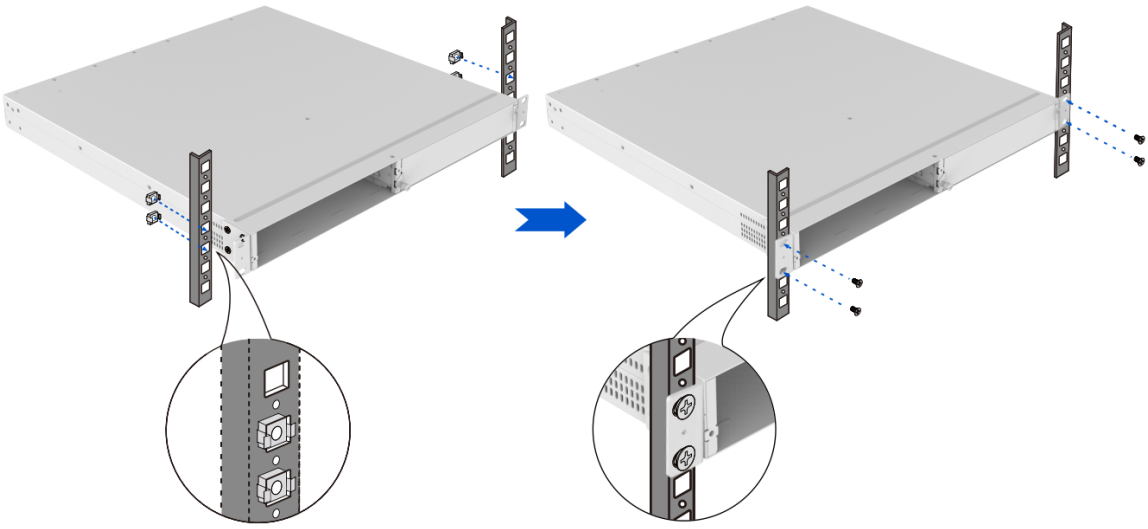

3.2.2 Installing the Device on a Workbench

Note

When the device is installed on a workbench, it must be installed in a location where mobility is restricted.

In many cases, users do not have the conditions for installing the device in a cabinet, on a wall, or on the ceiling. In this case, the device can be placed on a clean workbench.

(1) Attach the four rubber pads to the four corners at the bottom of the switch, as shown in Figure 3-1.

Figure 3-1 Installing the Switch on a Workbench-1

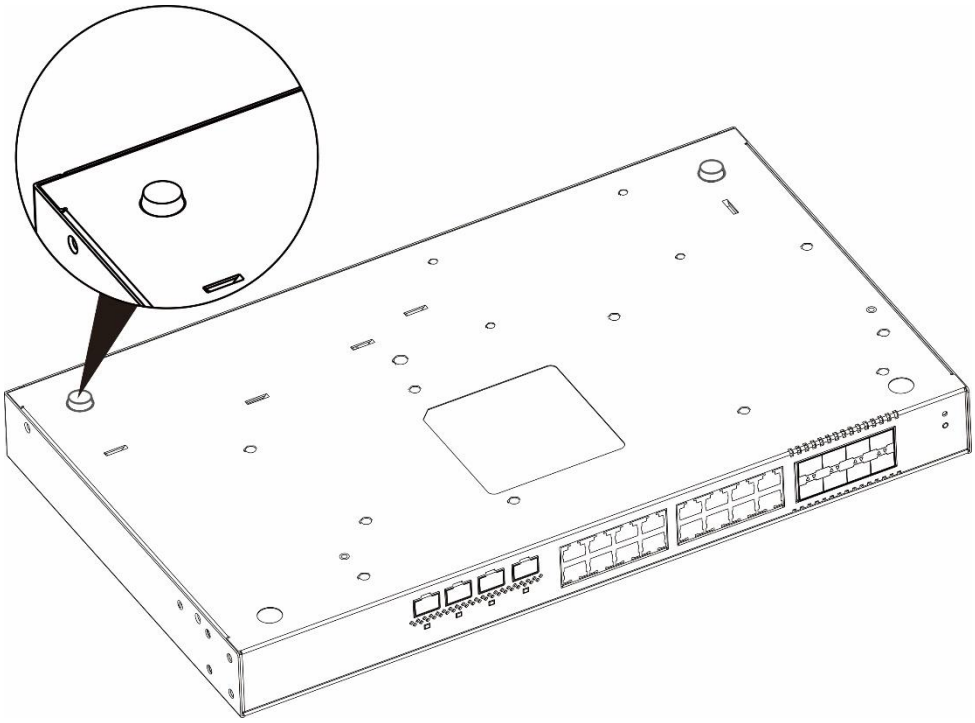

(2) Place the switch on the workbench and ensure adequate airflow around the switch.

Figure 3-2 Installing the Switch on a Workbench-2

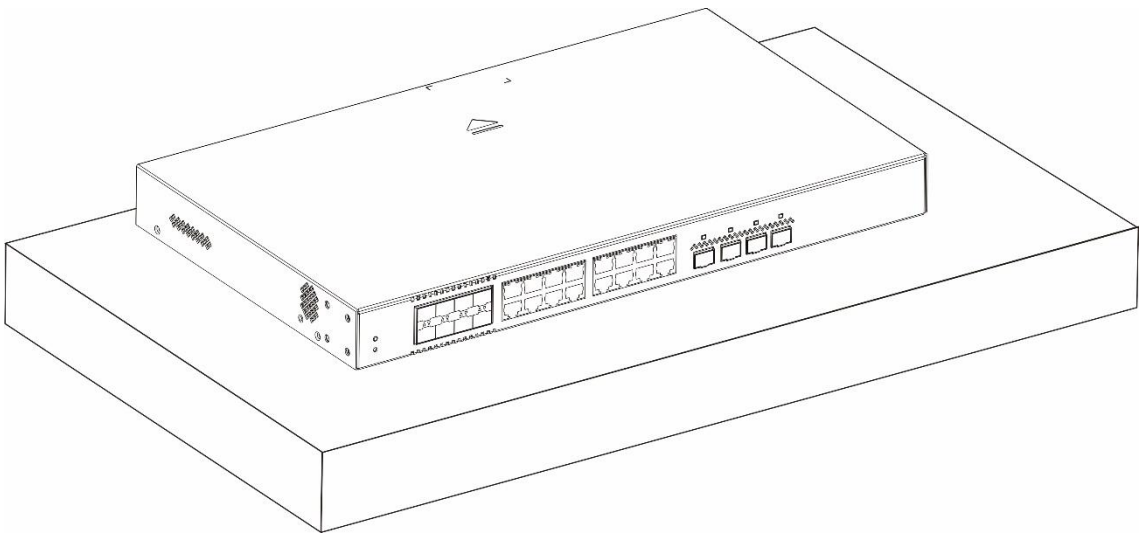

Note

The location where the switch is installed must be subject to movement restrictions..

3.3 Connecting the Grounding Cable

Warning

- To guarantee personal and device safety, the switch must be grounded properly.
- The resistance between the switch chassis and the ground must be less than 1 Ω.
- The O&M personnel should check whether the AC outlet is properly connected to the protective ground of the building. If not, the O&M personnel should use a protective earth conductor from the AC outlet protective earth lug to the building protective earth.
- The power socket should be installed near the device and easily accessible.
- During device installation, connect the grounding cable first and disconnect it last.
- The cross-sectional area of a protective grounding cable should be at least 2.5 mm2 (12 AWG).

A proper grounding system is crucial for ensuring stable and reliable operation, as well as preventing lightning strikes and interference.

- The grounding cable must be a good conductor with a cross-sectional area determined by the maximum current load.
- Do not use bare wires.

Procedure:

(1) Remove the ground stud at the back of the device.

(2) Use the removed grounding stud to secure one end of the grounding wire to the chassis. Similarly, connect the other end of the grounding wire to the grounding wire of the cabinet or the grounding bar of the equipment room.

3.4 Connecting the Power Cord

Warning

Use the delivered power cords. Otherwise, security accidents may occur.

Procedure:

(1) Ensure that the circuit breaker on the power supply side is turned off, plug one end of the power cord that comes with the device into the power socket on the rear panel of the chassis and the other end into the AC power socket.

(2) Turn on the circuit breaker on the power supply side.

(3) Check whether the power LED on the front panel of the device is on. If the LED is on, the power cord is connected correctly.

1.2 Checklist After Installation

- The device is securely installed.
- The power cord meets the requirements.
- The cabinet is properly grounded.
- The device is correctly connected to terminals or other devices.
- The power cord is long enough to avoid over-extension.

4 Logging in to the Web Page

(1) Connect your PC to the Ethernet port of the device through a cable.

(2) Configure the PC with an IP address on the network of 10.44.77.XXX (Range: 1–255, excluding 200).

(3) Open a browser on the PC and enter 10.44.77.200 to log in to the system configuration page. (The default password is admin when you log in to the device for the first time. To ensure security, you are advised to change the password after login, and update the password regularly.)

(4) Perform device debugging based on service requirements.

5 FAQs

5.1 Troubleshooting Flowchart

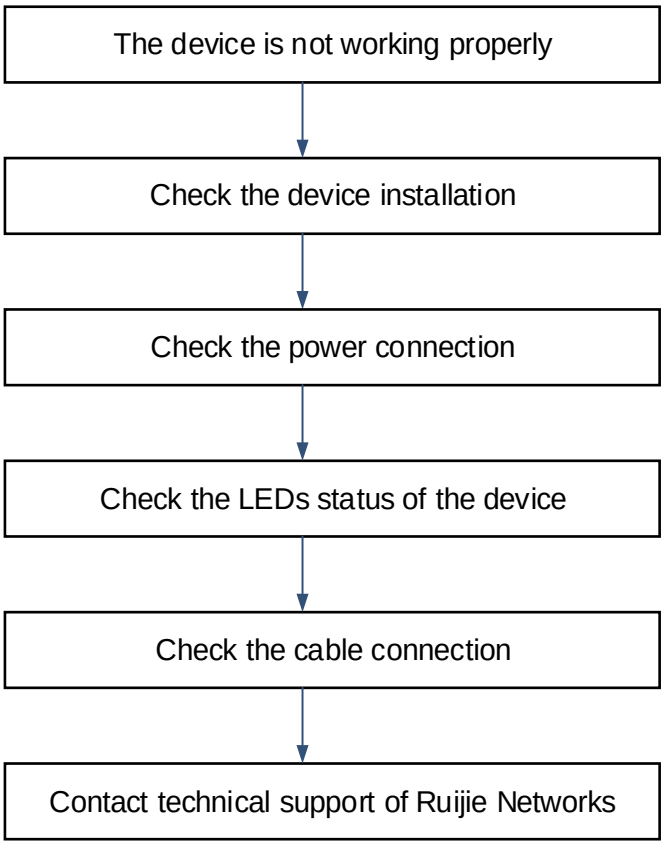

5.2 Common Faults

Fault Symptom	Possible Cause	Solution
The login password cannot be retrieved.	The login password is forgotten after being configured.	Press and hold the reset button for over 5s to reset your username and password.
The SYS LED is off after the switch is powered on.	No power is supplied to the switch or the power cord is loose.	Check whether the power socket in the equipment room is normal and whether the power cord connected to the switch is loose.

Fault Symptom	Possible Cause	Solution
An RJ45 port is disconnected or a frame sending or receiving error occurs.	The twisted pair cable is not connected properly. The cable length exceeds 100 m (328.08 ft.). The port is specially configured and does not use the same work mode as the interconnected switch.	Replace the twisted pair cable. Use optical cables or connect to an intermediate switch for relay. Make sure that the port works in the same mode as the interconnected switch.
An optical port cannot be connected.	The receiving and transmitting ends are connected incorrectly. The types of the interconnected optical transceivers do not match. The optical cable type does not meet the requirements. The length of the optical cable exceeds the allowed length marked on the optical transceiver. The optical cable or optical connector is contaminated.	Exchange the receiving and transmitting ends of the optical cable. Replace the optical transceiver with another one of the same model. Replace the optical cable with a qualified one. Use an optical cable with the allowed length. Use a clean cloth or a cleaning pen to clean the end face. For details, see the appendix.

6 Appendix

6.1 Ports, Connectors, and Media

6.1.1 1000BASE-T/100BASE-TX/10BASE-T Ports

1000BASE-T/100BASE-TX/10BASE-T ports are Ethernet ports with auto-negotiation of three speeds: 10 Mbps, 100 Mbps, and 1000 Mbps. They supports auto MDI/MDIX Crossover, and use RJ 45 connectors.

Compliant with the IEEE 802.3ab standard, a 1000BASE-T port requires 100-ohm Category 5 or 5e unshielded twisted pair (UTP) or shielded twisted pair (STP) (recommended) cables, and supports a maximum distance of 100 meters (328 feet).

A 1000BASE-T port requires all four pairs of wires to be connected for data transmission. Figure 6-1 shows the four pairs of wires for the 1000BASE-T port.

Figure 6-1 1000BASE-T Twisted Pair Connections

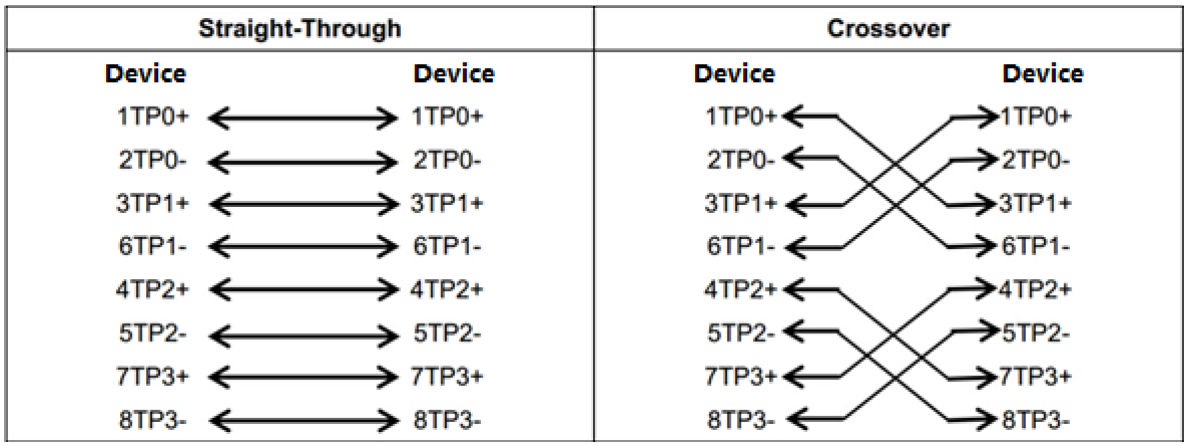

100BASE-TX/10BASE-T ports can be interconnected using cables of the preceding specifications. In addition, a 10BASE-T port can be connected using 100-ohm Category 3, Category 4, and Category 5 cables, while a 100BASE-TX port can be connected using 100-ohm Category 5 cables, and supports a maximum distance of 100 meters (328 feet). Table 6-1 shows 100BASE-TX/10BASE-T pin assignments.

Table 6-1 100BASE-TX/10BASE-T Pin Assignments

Pin	Socket	Plug
1	Input Receive Data+	Output Transmit Data+
2	Input Receive Data-	Output Transmit Data-
3	Output Transmit Data+	Input Receive Data+
6	Output Transmit Data-	Input Receive Data-
4, 5, 7, 8	Not Used	Not Used

Figure 6-2 shows the connection of straight-through and crossover cables for 100BASE-TX/10BASE-T ports.

Figure 6-2 100BASE-TX/10BASE-T Twisted Pair Connections

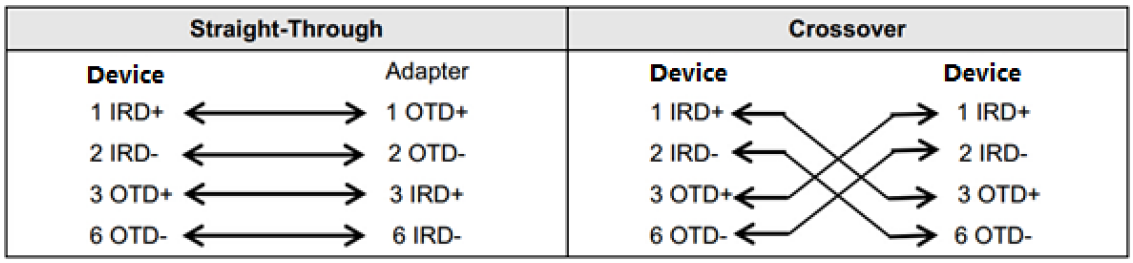

6.1.2 SFP Ports and SFP+ Ports

SFP ports and SFP+ ports require optical transceivers or Ethernet transceivers.

- Optical transceivers for SFP and SFP+ ports use LC connectors and connect to the peer end via an optical cable.
- SFP Ethernet transceivers use RJ45 connectors and connect to the remote end via an Ethernet cable.

Select either single-mode or multi-mode optical cables depending on the optical transceiver type. Figure 6-3 shows the optical cable connection. Note that the TX on the local end should connect to the RX on the peer end, and the RX on the local end should connect to the TX on the peer end.

Figure 6-3 Optical Cable Connections

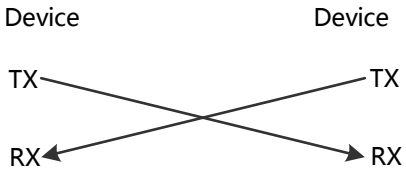

6.1.3 PON Ports and SC Ports

Figure 6-4 shows the PON ports and SC ports on equipment in Ruijie Reyee e-Lighten Optical Solution.

- PON ports on the OLT require e-Lighten optical transceivers with SC connectors, which are connected to an optical splitter using single-mode pigtails.
- SC ports on optical splitters and ONUs use SC connectors, and are interconnected using single-mode pigtails.

Figure 6-4 PON Port and SC Port Connections

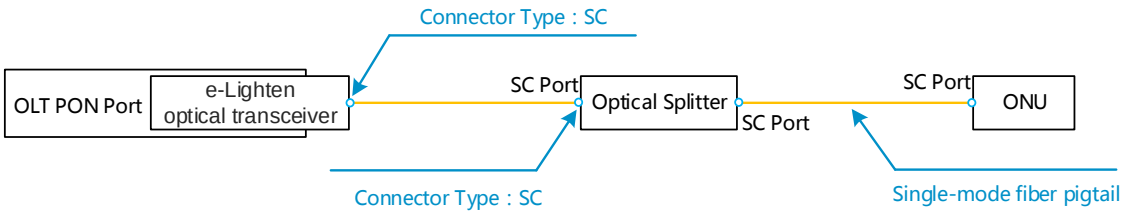

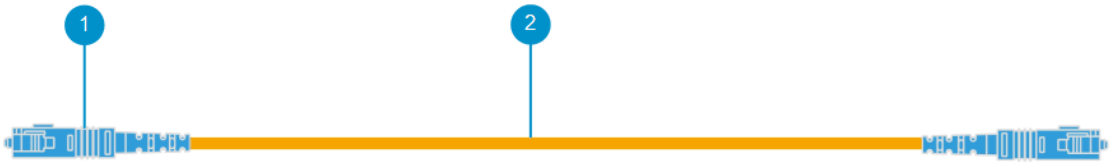

No	Description
1	SC connector
2	Single-mode pigtail

6.2 SFP and SFP+ Transceiver Modules

We provide SFP and SFP+ transceiver modules according to the port types. You can select the module to suit your specific needs. An SFP transceiver module can be a 1GE optical transceiver or Ethernet transceiver (Mini-GBIC-GT), while an SFP+ transceiver module is a 10GE optical transceiver. The following models and technical specifications of some SFP and SFP+ transceiver modules are listed for your reference.

6.2.1 SFP Transceiver Modules

Table 6-2 Models and Specifications of SFP Optical Transceiver Modules

Model	Wavelength (nm)	Optical Cable Type	DDM (Yes/No)	Intensity of Transmitted Light (dBm)		Intensity of Received Light (dBm)	
				Min	Max	Min	Max
MINI-GBIC-SX-MM850	850	MMF	No	-9.5	-3	-17	0
MINI-GBIC-LX-SM1310	1310	SMF	No	-9.5	-3	-20	-3
GE-eSFP-SX-MM850	850	MMF	Yes	-9.5	-3	-17	0
GE-eSFP-LX-SM1310	1310	SMF	Yes	-9.5	-3	-20	-3
GE-SFP-LX-SM1310	1310	SMF	No	-9.5	-3	-20	-3
MINI-GBIC-LH40-SM1310	1310	SMF	Yes	-2	3	-22	-3
GE-SFP-SX-SM1310-BIDI	1310	MMF	No	-10	-5	-17	-3
GE-SFP-SX-SM1550-BIDI	1550	MMF	No	-10	-5	-17	-3
GE-SFP-LX20-SM1310-BIDI	1310TX/1550RX	SMF	Yes	-9	-3	-20	-3
GE-SFP-LX20-SM1550-BIDI	1550TX/1310RX	SMF	Yes	-9	-3	-20	-3

Model	Wavelength (nm)	Optical Cable Type	DDM (Yes/No)	Intensity of Transmitted Light (dBm)		Intensity of Received Light (dBm)	
				Min	Max	Min	Max
GE-SFP-LH40-SM1310-BIDI	1310TX/1550RX	SMF	Yes	-5	0	-24	-1
GE-SFP-LH40-SM1550-BIDI	1550TX/1310RX	SMF	Yes	-5	0	-24	-1
MINI-GBIC-ZX50-SM1550	1550	SMF	Yes	-5	0	-22	-3
MINI-GBIC-ZX80-SM1550	1550	SMF	Yes	0	4.7	-22	-3
MINI-GBIC-ZX100-SM1550	1550	SMF	Yes	0	5	-30	-9
GE-SFP-SX	850	MMF	No	-9.5	-3	-17	0
GE-SFP-LX	1310	SMF	No	-9.5	-3	-20	-3
SFP-MM850	850	MMF	No	-9.5	-3	-17	0
SFP-SM1310	1310	SMF	No	-9.5	-3	-20	-3

Table 6-3 SFP Ethernet Transceiver Modules

Standard	SFP Media Converter	DDM (Yes/No)
1000BASE-T	Mini-GBIC-GT	No

Table 6-4 SFP Module Cabling Specifications

SFP Model	Connector Type	Optical Cable Type	Core Specifications (μm)	Max. Cabling Distance
MINI-GBIC-SX-MM850	LC	MMF	62.5/125	275 m (902.23 ft.)
			50/125	550 m (1804.46 ft.)
MINI-GBIC-LX-SM1310	LC	SMF	9/125	10 km (32808.40 ft.)
GE-eSFP-SX-MM850	LC	MMF	62.5/125	275 m (902.23 ft.)
			50/125	550 m (1804.46 ft.)
GE-eSFP-LX-SM1310	LC	SMF	9/125	10 km (32808.40 ft.)
GE-SFP-LX-SM1310	LC	SMF	9/125	10 km (32808.40 ft.)

SFP Model	Connector Type	Optical Cable Type	Core Specifications (μm)	Max. Cabling Distance
MINI-GBIC-LH40-SM1310	LC	SMF	9/125	40 km (131233.60 ft.)
GE-SFP-SX-SM1310-BIDI	LC	MMF	50/125	500 m (1640.42 ft.)
GE-SFP-SX-SM1550-BIDI	LC	MMF	50/125	500 m (1640.42 ft.)
GE-SFP-LX20-SM1310-BIDI	LC	SMF	9/125	20 km (65616.80 ft.)
GE-SFP-LX20-SM1550-BIDI	LC	SMF	9/125	20 km (65616.80 ft.)
GE-SFP-LH40-SM1310-BIDI	LC	SMF	9/125	40 km (131233.60 ft.)
GE-SFP-LH40-SM1550-BIDI	LC	SMF	9/125	40 km (131233.60 ft.)
MINI-GBIC-ZX50-SM1550	LC	SMF	9/125	50 km (164042.00 ft.)
MINI-GBIC-ZX80-SM1550	LC	SMF	9/125	80 km (65616.80 ft.)
MINI-GBIC-ZX100-SM1550	LC	SMF	9/125	100 km (328083.00 ft.)
GE-SFP-SX	LC	MMF	62.5/125	275 m (902.23 ft.)
			50/125	550 m (1804.46 ft.)
GE-SFP-LX	LC	SMF	9/125	10 km (32808.40 ft.)
Mini-GBIC-GT	RJ45 Ethernet cable	Cat 5 (or higher) UTP or STP		100 m (328.08 ft.)

Caution

- For optical transceivers with a cabling distance equal to or greater than 40 km (131,233.6 ft.), install an optical attenuator to avoid overload on the optical receiver when using short-distance SMF optical cables.
- An optical transceiver is a laser transmitter. Do not look directly into the optical transceiver to prevent it from burning your eyes.
- To keep the optical transceiver clean, ensure that the unused ports remain capped.

Rate/Distance	Pairing Model
1000 Mbps/500 m (1640.42 ft.)	GE-SFP-SX-SM1310-BIDI GE-SFP-SX-SM1550-BIDI
1000 Mbps/20 km (65616.80 ft.)	GE-SFP-LX20-SM1310-BIDI GE-SFP-LX20-SM1550-BIDI

1000 Mbps/40 km (131233.60 ft.)	GE-SFP-LH40-SM1310-BIDI GE-SFP-LH40-SM1550-BIDI
10000 Mbps/300 m (984.25 ft.)	XG-SFP-SR-SM1270-BIDI XG-SFP-SR-SM1330-BIDI
10000 Mbps/10 km (32808.40 ft.)	XG-SFP-LR-SM1270-BIDI XG-SFP-LR-SM1330-BIDI

Caution

The BIDI modules must be used in pairs. For example, if you install the GE-SFP-LX20-SM1310-BIDI on one end, you must install the GE-SFP-LX20-SM1550-BIDI on the other end.

6.2.2 SFP+ Transceiver Modules

Table 6-5 Models and Specifications of SFP+ Optical Transceiver Modules

Model	Wavelength (nm)	Optical Cable Type	DDM (Yes/No)	Intensity of Transmitted Light (dBm)		Intensity of Received Light (dBm)	
				Min	Max	Min	Max
XG-SFP-SR-MM850	850	Yes	MMF	-7.3	-1	-9.9	-1
XG-SFP-ZRV1	850	Yes	MMF	-7.3	-1	-9.9	-1
XG-SR-MM850	850	Yes	MMF	-7.3	-1	-9.9	-1
SFP+MM850	850	Yes	MMF	-7.3	-1	-9.9	-1
XG-SFP-SR-SM1270-BIDI	1270	No	MMF	-3	4	-9	0.5
XG-SFP-SR-SM1330-BIDI	1270	No	MMF	-3	4	-9	0.5
XG-SFP-LR-SM1270-BIDI	1270	No	SMF	-6.5	0.5	-14.4	0.5
XG-SFP-LR-SM1330-BIDI	1330	No	SMF	-6.5	0.5	-14.4	0.5
XG-LR-SM1310	1310	Yes	SMF	-8.2	0.5	-14.4	0.5
XG-SFP-LR-SM1310	1310	Yes	SMF	-8.2	0.5	-14.4	0.5
XG-eSFP-LR-SM1310	1310	Yes	SMF	-8.2	0.5	-14.4	0.5
XG-SFP-ER-SM1550	1550	Yes	SMF	-4.7	4	-11.3	-1
XG-SFP-ZR-SM1550	1550	Yes	SMF	0	4	-24	-7
XS-SFP-SR	850	Yes	MMF	-7.3	-1	-9.9	-1
XS-SFP-LR	1310	Yes	SMF	-8.2	0.5	-10.3	0.5

Table 6-6 Models of SFP+ Active Optical Cable Modules

Model	Transceiver Type	Connector Type	Copper Cable Length	Conductor Diameter (AWG)	Rate (Gb/s)	DDM (Yes/No)
XG-SFP-AOC1M	Active	SFP+	1 m (3.28 ft)	N/A	10.3125	Yes
XG-SFP-AOC3M	Active	SFP+	3 m (9.84 ft)	N/A	10.3125	Yes
XG-SFP-AOC5M	Active	SFP+	5 m (16.40 ft)	N/A	10.3125	Yes
XG-SFP-AOC10M	Active	SFP+	10 m (32.81 ft)	N/A	10.3125	Yes

Note

- SFP+ module types and models are subject to change without prior notice. For any updates about the optical transceivers, contact Ruijie Networks marketing or technical support personnel.
- The DDM function of AOC cables does not report the transmit power. The transmit power is displayed as N/A.

Table 6-7 SFP+ Module Cabling Specifications

Model	Connector Type	Optical Cable Type	Core Specifications (μm)	Modal Bandwidth (MHz•km)	Max. Cabling Distance
XG-SFP-SR-MM850	LC	MMF	50/125	2000 (OM3)	300 m (984.25 ft.)
XG-SFP-ZRV1	LC	MMF	50/125	2000 (OM3)	300 m (984.25 ft.)
XG-SR-MM850	LC	MMF	50/125	2000 (OM3)	300 m (984.25 ft.)
SFP+MM850	LC	MMF	50/125	2000 (OM3)	300 m (984.25 ft.)
XG-SFP-SR-SM1270-BIDI	LC	MMF	50/125	2000 (OM3)	300 m (984.25 ft.)
XG-SFP-SR-SM1330-BIDI	LC	MMF	50/125	2000 (OM3)	300 m (984.25 ft.)

Model	Connector Type	Optical Cable Type	Core Specifications (μm)	Modal Bandwidth (MHz•km)	Max. Cabling Distance
XG-SFP-LR-SM1270-BIDI	LC	SMF	9/125	N/A	10 km (32808.40 ft.)
XG-SFP-LR-SM1330-BIDI	LC	SMF	9/125	N/A	10 km (32808.40 ft.)
XG-SFP-LR-SM1310	LC	SMF	9/125	N/A	10 km (32808.40 ft.)
XG-SFP-ER-SM1550	LC	SMF	9/125	N/A	40 km (131233.60 ft.)
XG-SFP-ZR-SM1550	LC	SMF	9/125	N/A	80 km (65616.80 ft.)
XS-SFP-SR	LC	MMF	62.5/125	200 (OM1) 160	33 m 108.27 ft.) 26 m (85.30 ft.)
			50/125	2000 (OM3) 500 (OM2) 400 (OM1)	300 m (984.25 ft.) 82 m (269.03 ft.) 66 m (216.54 ft.)
XS-SFP-LR	LC	SMF	9/125	N/A	10 km (32808.40 ft.)

Table 6-8 Models and Specifications of e-Lighten Optical Transceivers

Model	Wavelength (nm)	Optical Cable Type	DDM (Yes/No)	Transmit Power (dBm)		Receive Power (dBm)	
				Min	Max	Min	Max
OM-GE-SFP-10KM-SM1490	1490/1310	Yes	SMF	3	7	–32	–12

6.3 Surge Protection

6.3.1 Installing an AC Power Lightning Arrester

When an AC power cord from outdoors is directly plugged into the power port of the equipment, the AC power connector must be connected to an external surge protector power strip to protect the equipment against lightning strikes. The surge protector power strip can be fixed on the rack, workbench, or wall in the equipment room by using cable ties and screws. AC power enters the equipment through the surge protector power strip.

Figure 6-5 Installing an AC Power Lightning Arrester

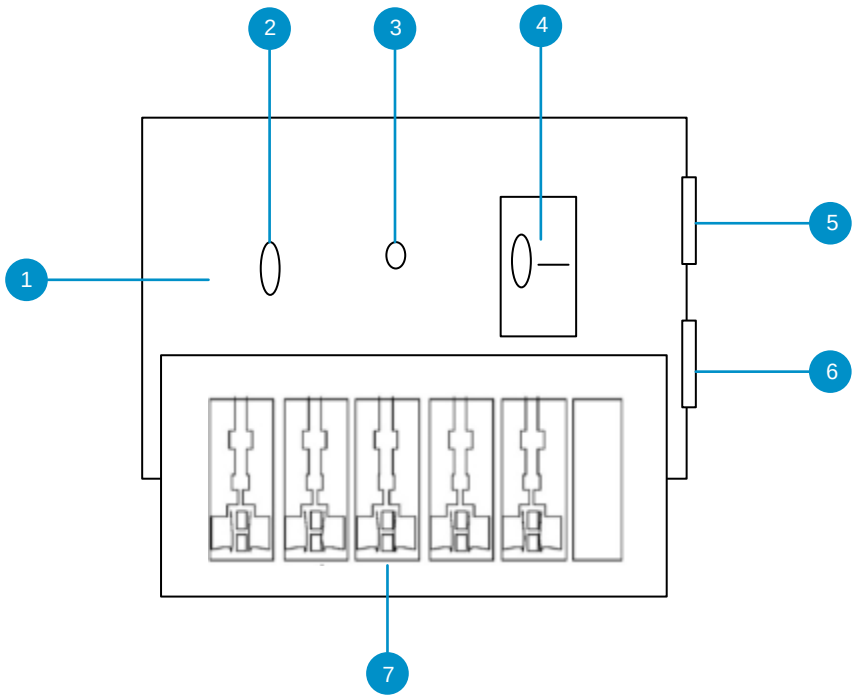

No.	Description
1	Installed electronic circuit board
2	Normally running indicator: When the indicator is green, the circuit is working properly. Otherwise, the protective circuit is damaged.
3	Grounding and polarity detection indicator: If the indicator is red, cable connection is incorrect (the ground cable is not connected, or the N and L lines are reversely connected). Check your power supply line.
4	Power switch
5	IEC standard socket, which is connected to the power supply in the equipment room through the power cable
6	Overload auto-protector, which can be reset manually
7	Multi-purpose sockets (connected to the power supply of the switch)

Note

The lightning arrester is not delivered with the equipment. Please purchase it based on actual requirements.

Precautions:

- Make sure that the PE terminal of the power arrester is well grounded.
- After the AC power plug of the equipment is connected to the socket of the power arrester (lightning resistance socket), the surge protection function is implemented only if the RUN indicator is green and the ALARM indicator is OFF.
- If the indicator on the power arrester is red, check whether it is caused by poor grounding connection or by the reversed connection of the Null and Live lines. The detection method is as follows: Use a multimeter to measure the polarity of the power socket for the arrester when the indicator is red. If the N line is on the left and the L line is on the right (facing the socket), the arrester's PE terminal is not grounded. If not, the polarity of the arrester power cord should be reversed. In this case, you should open the power arrester and rectify the polarity of the connection. If the indicator is still red, the arrester's PE terminal is not grounded.

6.3.2 Installing an Ethernet Port Lightning Arrester

Connect an Ethernet port arrester to the equipment to prevent the damage by lightning before connecting an outdoor network cable to the device.

Tools: Phillips screwdrivers or flat-head screwdriver, multimeter, and diagonal pliers

Procedure:

(1) Tear one side of the protective paper for the double-sided adhesive tape and paste the tape to the enclosure of the Ethernet port arrester.

(2) Tear the other side of the protective paper for the double-sided adhesive tape and paste the Ethernet port arrester to the enclosure. The paste position for the Ethernet port arrester should be as close to the grounding terminal of the equipment as possible.

(3) According to the distance between the equipment grounding terminal and the Ethernet port arrester, cut the grounding cable for the Ethernet port arrester and firmly crimp the grounding cable to the grounding terminal of the equipment.

(4) Use a multimeter to check whether the grounding cable for the arrester is in good contact with the grounding terminal and the enclosure of the equipment.

(5) Connect the arrester by using an adapter cable (note that the external network cable is connected to the IN end, while the adapter cable connected to the equipment is connected to the OUT end) and check whether the service module LED is normal.

(6) Use a nylon cable tie to bind the power cords.

Figure 6-6 Installing an Ethernet Port Lightning Arrester

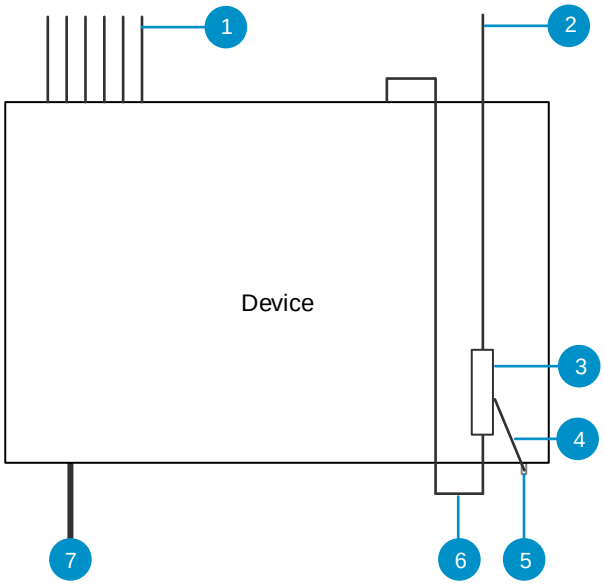

No.	Description
1	Ethernet cable for indoor connection
2	Ethernet cable connected to the outdoor
3	RJ45 port arrester (pasted on the enclosure)
4	Ground cable of the arrester
5	Grounding lug of the equipment
6	RJ45 port adapter cable
7	Power input

Note

- The Ethernet port arrester is only for Ethernet ports with an RJ45 connector.
- The Ethernet port arrester is not delivered with the equipment. Please purchase it based on actual requirements. The Ethernet port arrester user manual contains technical parameters and maintenance and installation instructions for the Ethernet port arrester. Carefully read this manual before installation.

- Pay attention to the following situations during the installation to avoid influencing the performance of the Ethernet port arrester:
- Reversed installation direction of the arrester. Connect the external network cable to the “IN” end and connect the Ethernet port of the equipment to the “OUT” end.
- Poor grounding of the arrester. The grounding cable of the arrester should be as short as possible to ensure that it is in good contact with the grounding terminal of the equipment. Use a multimeter to confirm the contact condition after grounding.
- Incomplete arrester installation. If there is more than one port connected to external power cords, arresters

need to be installed on all connection ports for the purpose of surge protection.

6.4 Recommended Cabling

When the device is installed in a standard 19-inch rack, route the cables through the cable management brackets. Top cabling or bottom cabling is adopted according to the actual situation in the equipment room. All conversion connectors should be placed at the bottom of the rack instead of outside the rack that is easily accessible. Power cords are routed beside the cabinet, and top cabling or bottom cabling is adopted according to the actual situation in the equipment room, such as the locations of the DC power distribution box, AC power socket, or surge protection box.

6.4.1 Requirements for the Minimum Bend Radius of an Ethernet Cable

- The bend radius of a fixed power cord, Ethernet cable, or flat cable should be over five times greater than their respective diameters. The bend radius of these cables that are often bent or plugged should be over seven times greater than their respective diameters.
- The bend radius of a fixed common coaxial cable should be over seven times greater than its diameter. The bend radius of the common coaxial cable that is often bent or plugged should be over 10 times greater than its diameter.
- The bend radius of a fixed high-speed cable (such as SFP+ cable) should be over five times greater than its diameter. The bend radius of the fixed high-speed cable that is often bent or plugged should be over 10 times greater than its diameter.

6.4.2 Requirement for the Minimum Bend Radius of an Optical Cable

- When an optical cable is coiled, the diameter of a fiber tray should be over 25 times greater than the diameter of the optical cable.
- When an optical cable is moved, the bend radius of the optical cable should be over 20 times greater than the diameter of the optical cable.
- When an optical cable is laid, the bend radius of the optical cable should be over 10 times greater than the diameter of the optical cable.

6.4.3 Precautions for Bundling up Cables

- Before cables are bundled, mark labels and stick the labels to cables wherever appropriate.
- Cables should be neatly and properly bundled in the rack without twisting or bending, as shown in Figure 6-7.

Figure 6-7 Binding Cables (I)

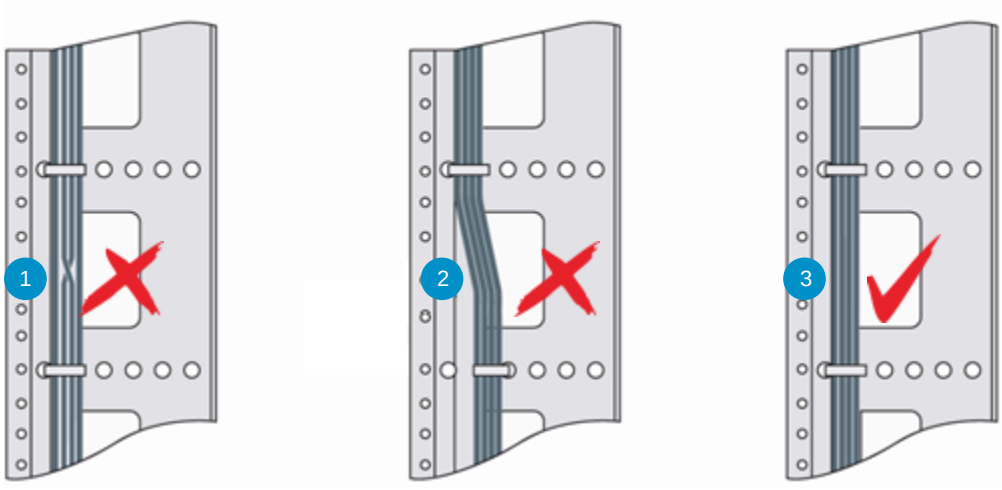

No.	Description
1	In the rack, cables should not be wound up after being bundled.
2	In the rack, cables should not bend after being bundled.
3	In the rack, cables should be neatly and straightly bundled.

- Cables of different types (such as power cords, signal cables, and ground cables) should be separated in cabling and bundling. Mixed bundling is disallowed. When they are close to each other, you are advised to adopt crossover cabling. In the case of parallel cabling, maintain a minimum distance of 30 mm (1.18 in.) between power cords and signal cables.
- The cable management brackets and cabling troughs inside and outside the rack should be smooth without sharp corners.
- The metal hole traversed by cables should have a smooth and fully rounding surface or an insulated lining.
- Use cable ties to bundle up cables properly. Please do not connect two or more cable ties to bundle up cables.
- After bundling up cables with cable ties, cut off the remaining part. The cut should be smooth and trim, without sharp corners, as shown in Figure 6-8.

Figure 6-8 Binding Cables (II)

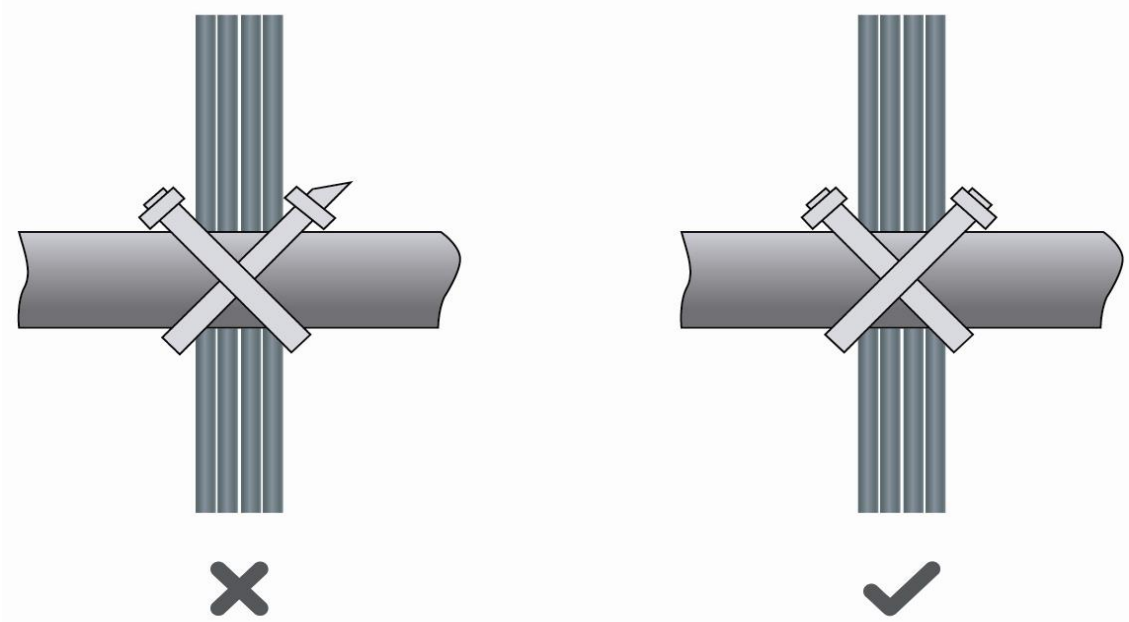

- When cables need to be bent, please bundle them up but do not tie them where the cables will be bent, as shown in Figure 6-9.

Figure 6-9 Binding Cables (III)

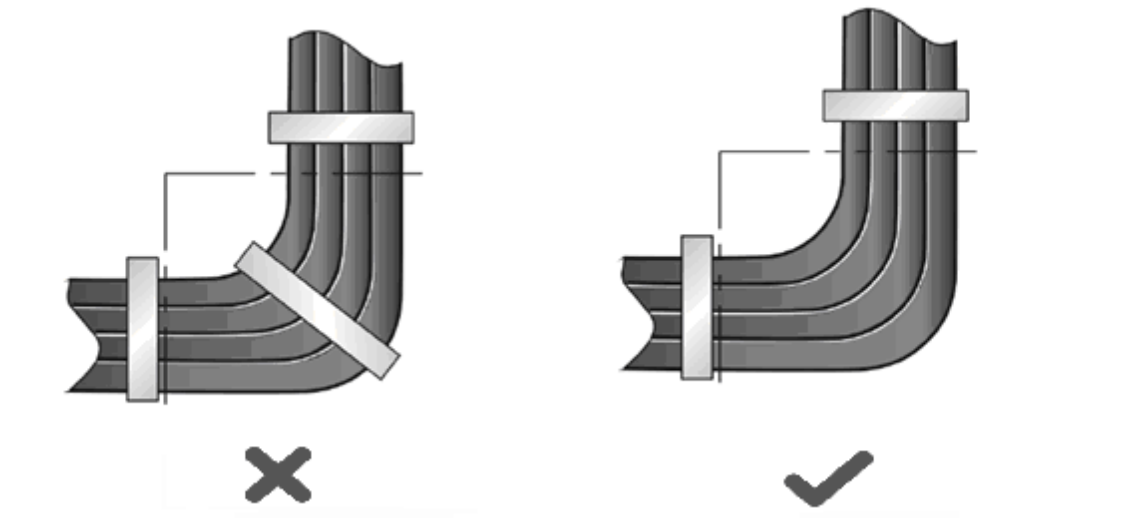

- Cables not to be assembled or remaining parts of cables should be folded and placed in a proper position of the rack or cable trough. The proper position refers to a position that does not affect device running or damage the device or cable.
- Do not bind power cords to the guide rails of moving parts.
- The power cords connecting moving parts such as door grounding cables should be reserved with a margin after being assembled to avoid suffering tension or stress. When the moving part is installed, the remaining cable part should not touch heat sources, sharp corners, or sharp edges. If heat sources cannot be avoided,

high-temperature cables should be used.

- When screw threads are used to fasten cable terminals, the anchor or screw must be tightly fastened, as shown in Figure 6-10.

Figure 6-10 Cable Fastening

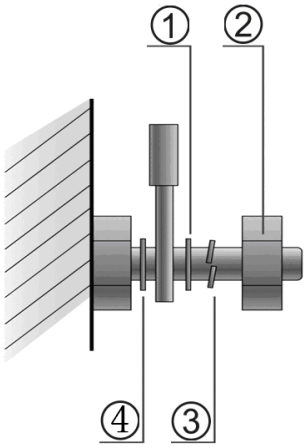

① Flat washer ③ Spring washer

② Screw nut ④ Flat washer

- Hard power cords should be fastened in the terminal connection area to prevent stress on terminal connection and cable.
- Do not use self-tapping screws to fasten terminals.
- Power cords of the same type and in the same cabling direction should be bundled up into cable bunches, with cables in cable bunches clean and straight.
- Bundle up cables by using cable ties.

Cable Bunch Diameter	Distance Between Every Binding Point
10 mm (0.39 in.)	80 mm to 150 mm (3.15 in. to 5.91 in.)
10 mm to 30 mm (0.39 in. to 1.18 in.)	150 mm to 200 mm (5.91 in. to 7.87 in.)
30 mm (1.18 in.)	200 mm to 300 mm (7.87 in. to 11.81 in.)

- Do not tie cables or bundles in a knot.
- For wiring terminal sockets (such as circuit breakers) with cord end terminals, the metal part of the cord end terminal should not be exposed outside the terminal socket when assembled.

6.5 Site Selection

- The equipment room should be at least 5 km (3.11 miles) away from heavy pollution sources, such as the smelter works, coal mine, and thermal power plant. The equipment room should be at least 3.7 km (2.30

miles) away from medium pollution sources, such as the chemical factory, rubber factory, and electroplating factory. The equipment room should be at least 2 km (1.24 miles) away from light pollution sources, such as the food factory and leather plant. If the pollution source is unavoidable, the equipment room should be located on the windward side of the pollution source perennially with advanced protection.

- The equipment room should be at least 3.7 km (2.30 miles) away from the sea or salt lake. Otherwise, the equipment room must be sealed, with air conditioner installed for temperature control. Saline soil cannot be used for construction. Otherwise, you should select devices with advanced protection against severe environment.
- Do not build the equipment room in the proximity of livestock farms. Otherwise, the equipment room should be located on the windward side of the pollution source perennially. The previous livestock house or fertilizer warehouse cannot be used as the equipment room.
- The equipment room should be firm enough to withstand severe weather conditions such as windstorm and heavy rain as well as away from dust. If the dust is unavoidable, keep the door and window away from the pollution source.
- The equipment room should be away from the residential area. Otherwise, the equipment room should meet the construction standard in terms of noise.
- Make sure the air vent of the equipment room is away from the sewage pipe, septic tank, and sewage treatment tank. Keep the equipment room under positive pressure to prevent corrosive gas from entering the equipment room to corrode components and circuit boards.
- Keep the equipment room away from industrial boiler and heating boiler.
- The equipment room should be on the second floor. Otherwise, the equipment room floor should be 600 mm (23.62 in.) higher than the highest flood level ever recorded.
- Make sure there are no cracks or holes in the wall and floor. If there are cable entries in the wall or window, take proper sealing measures. Ensure that the wall is flat, wear-resistant, and dust-free, which should be up to the standard for flame retarding, soundproofing, heat absorption, dust reduction, and electromagnetic shielding.
- Keep the door and the window closed to make the equipment room sealed.
- The steel door is recommended for soundproofing.
- Sulfur-containing materials are forbidden.
- Keep the air conditioner from blowing wind straight toward the device or blowing water drops from the window or air vent toward the device.

6.6 Cleaning the Connectors and End Faces of Optical Cables

To ensure a good connection between a patch cable and an optical cable coupler, the cleanliness of the end face is a quite important factor, as it directly affects the communication quality of the optical network. In the daily construction of optical networks, however, improper operations or other reasons can easily contaminate the end face. When the end face accumulates dust, oil stains, and other dirt, if it is not detected and cleaned before connection, it will cause increased optical attenuation, leading to optical network failures. What's worse, it may even result in the collapse of the entire optical signal system. The following are common methods for cleaning connectors and end faces:

- Using fiber-optic cleaning pens

  Fiber-optic cleaning pens, also known as one-click fiber-optic cleaners, typically use anti-static resin materials, lint-free cleaning tip, and cleaning solution to ensure the product remains free from dust contamination. Available in 1.25 mm and 2.5 mm sizes, these pens are suitable for cleaning SC, FC, LC connectors, and more. Select an appropriate cleaning pen for the connector to be cleaned, and gently insert the pen into the connector. To prevent ferrule damage, avoid excessive pressure when you insert the cleaning pen. Press inward gently until you hear a "click", indicating the end face has been cleaned. If necessary, repeat the process 2 to 3 times for thorough cleaning. Finally, remove the pen to complete the cleaning process.

- Using fiber-optic cleaning boxes or lint-free cloths
  - Made from high-density textile fibers, fiber-optic cleaning boxes do not need alcohol, do not produce static electricity, and are lint-free. In addition, fiber-optic cleaning boxes offer a convenient way for cleaning various optical cable connectors, including SC, FC, LC, and ST connectors.
  - To use the cleaning box, grip it with one hand and press it to reveal the clean cleaning belt core. Gently swipe the optical cable ferrule to be cleaned across the cleaning belt several times to remove dirt from the end face. To prevent ferrule damage, avoid excessive pressure when you swipe the optical cable ferrule.