Ruijie Reyee RG-APF1250 Access Point

Installation Guide

Document version: V1.0
Date: 2024-07-01
Copyright © 2024 Ruijie Networks

Copyright

Copyright © 2024 Ruijie Networks

All rights are reserved in this document and this statement.

Without the prior written consent of Ruijie Networks, any organization or individual shall not reproduce, extract, back up, modify, or propagate the content of this document in any manner or in any form, or translate it into other languages or use some or all parts of the document for commercial purposes.

, and other Ruijie networks logos are trademarks of Ruijie Networks.

All other trademarks or registered trademarks mentioned in this document are owned by their respective owners.



Disclaimer

The products, services, or features you purchase are subject to commercial contracts and terms, and some or all of the products, services, or features described in this document may not be available for you to purchase or use. Except for the agreement in the contract, Ruijie Networks makes no explicit or implicit statements or warranties with respect to the content of this document.

The names, links, descriptions, screenshots, and any other information regarding third-party software mentioned in this document are provided for your reference only. Ruijie Networks does not explicitly or implicitly endorse or recommend the use of any third-party software and does not make any assurances or guarantees concerning the applicability, security, or legality of such software. You should choose and use third-party software based on your business requirements and obtain proper authorization. Ruijie Networks assumes no liability for any risks or damages arising from your use of third-party software.

The content of this document will be updated from time to time due to product version upgrades or other reasons, Ruijie Networks reserves the right to modify the content of the document without any notice or prompt.

This manual is designed merely as a user guide. Ruijie Networks has tried its best to ensure the accuracy and reliability of the content when compiling this manual, but it does not guarantee that the content of the manual is completely free of errors or omissions, and all the information in this manual does not constitute any explicit or implicit warranties.

Preface

Intended Audience

This document is intended for:

- Network engineers
- Technical support and servicing engineers
- Network administrators

Technical Support

- Official Website of Ruijie Reyee: https://reyee.ruijie.com
- Technical Support Website: https://reyee.ruijie.com/en-global/support
- Case Portal: https://www.ruijienetworks.com/support/caseportal
- Community: https://community.ruijienetworks.com
- Technical Support Email: service_rj@ruijienetworks.com
- Online Robot/Live Chat: https://reyee.ruijie.com/en-global/rita

Conventions

The signs used in this document are described as follows:

1. Signs

Danger

An alert that contains important safety instructions. Before you work on any equipment, be aware of the hazards involved and be familiar with standard practices in case of accidents.

Warning

An alert that calls attention to important rules and information that if not understood or followed can result in data loss or equipment damage.

Caution

An alert that calls attention to essential information that if not understood or followed can result in function failure or performance degradation.

Note

An alert that contains additional or supplementary information that if not understood or followed will not lead to serious consequences.

Specification

An alert that contains a description of product or version support.

2. Notes

This manual presents installation instructions, troubleshooting techniques, technical specifications, cable and connector requirements, and usage guidelines. It is intended for users who want to gain insight into the above content and have some experience in installing and maintaining network hardware. It is assumed that users are already familiar with relevant terms and concepts.

Contents

Preface I

1 Overview 1

1.1 About the RG-APF1250 1

1.2 Terms 1

1.3 Package Contents 2

1.4 Product Appearance 3

1.4.2 Front Panel 3

1.4.3 Rear Panel 5

1.5 Technical Specifications 6

1.6 Technical Specifications of Power Supply 8

1.7 Cooling 8

2 Preparing for Installation 9

2.1 Safety Guidelines 9

2.2 Site Requirements 9

2.2.1 Temperature and Humidity 9

2.2.2 Cleanliness 9

2.2.3 ESD Damage Prevention 10

2.2.4 Anti-Interference 10

2.2.5 Installation Site 10

2.3 Tools 11

3 Installing the AP 12

3.1 Before You Begin 12

3.2 Safety Precautions During Installation 12

3.3 Installing the AP 12
3.4 Bundling Cables 14
3.5 Verifying Installation 15
4 Commissioning 16
4.1 Setting Up the Configuration Environment 16
4.2 Powering on the AP 16
4.2.1 Checklist Before Power-on 16
4.2.2 Checklist After Power-on 16
4.3 Rectifying Power Supply Failures 16
5 Monitoring and Maintenance 17
5.1 Monitoring 17
5.2 Maintenance 17
6 Troubleshooting 18
6.1 General Troubleshooting Flowchart 18
6.2 Common Faults 18
6.2.1 System Status LED Is Off After the AP Is Powered On 18
6.2.2 After an Ethernet Cable is Connected, the Ethernet Port Cannot Be Used 18
6.2.3 A Client Cannot Discover the AP 18
7 Appendix 19
7.1 Connectors and Media 19

1 Overview

1.1 About the RG-APF1250

Passive Optical Local Area Network (POL) is a new networking mode that utilizes point-to-multipoint (P2MP) technology. Compared with the traditional Ethernet solution that relies on the point-to-point (P2P) technology, this mode features fewer nodes to be maintained, a simplified Layer 2 network architecture, and seamless upgrades.

Ruijie Reyee has developed a new series of products for Ethernet optical splitting to form the Reyee e-Lighten Solution. This solution supports both POL (P2MP) and traditional Ethernet (P2P) networking modes. In this way, contractors can complete the networking and commissioning of POLs without training.

The Reyee e-Lighten Solution includes e-Lighten converged switches (OLTs), e-Lighten APs (ONUs), e-Lighten access switches (ONUs), optical transceivers, and passive optical splitters. The RG-APF1250 is a multi-service wall-mounted e-Lighten AP (ONU) launched by Ruijie Reyee for the POL. With an attractive design, the RG-APF1250 can be directly installed on a wall using a mounting bracket to smoothly blend into the environment. In compliance with the IEEE 802.11a/b/g/n/ac Wave 1 and IEEE 802.11ac Wave 2 standards, the RG-APF1250 can work on both 2.4 GHz and 5 GHz frequency bands. The RG-APF1250 provides a combined data rate of 1167 Mbps, eliminating the performance bottleneck.

In hotel scenarios, based on multi-service integration of the RG-APF1250, one fiber-to-the-home (FTTH) cable can meet the access requirements of five services in hotel rooms, including wireless network, wired network, guest control, IPTV, and VoIP services. This reduces traditional Ethernet cables and saves significant labor costs, thereby providing contractors with a cost-effective POL solution for hotels.

1.2 Terms

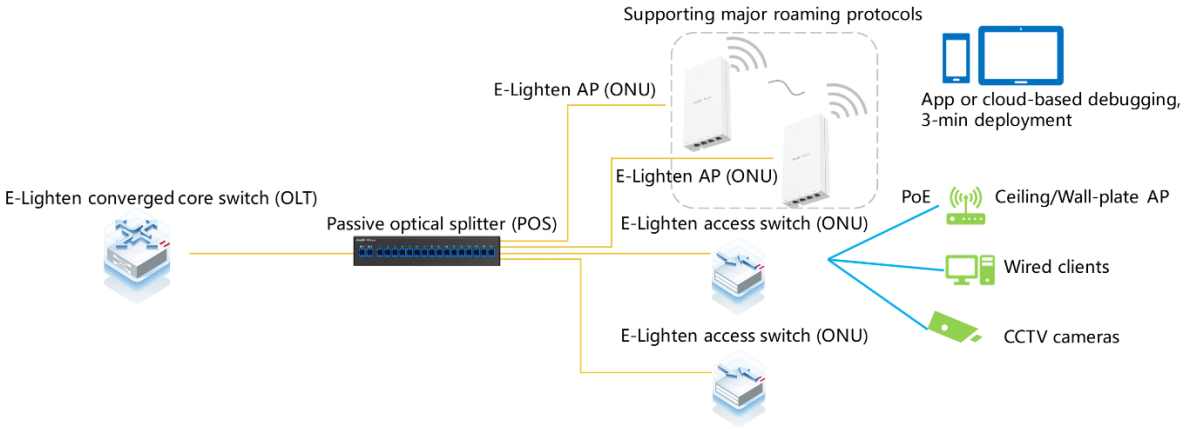

- Passive optical network (PON): A PON uses optical fibers to transmit data. On a PON, no external power supply or electronic amplifier is required. Instead, a PON uses passive optical splitters to transmit optical signals from an OLT to multiple ONUs.
- Optical line terminal (OLT): An OLT is a device on the equipment room side of a PON and is responsible for sending and receiving optical signals.

- Optical network unit (ONU): An ONU is a device on the access side of a PON. It connects to clients and communicates with the OLT. It is responsible for converting optical signals and transmitting data.
- PON port: A PON port is a downlink port of an OLT for connecting to an ONU.

1.3 Package Contents

Table 1-1 Package Contents

No.	Item	Quantity
1	RG-APF1250 access point	1
2	Mounting bracket (pre-installed on the AP)	1
3	M4 x 20 mm Phillips pan head screws	2
4	Nuts	2
5	DC power adapter	1
6	User Manual	1
7	Warranty card	1

Note

The package contents are subject to the purchase contract, and actual delivery may vary. Please check the items carefully against the package contents or purchase contract. If you have any questions, please contact your distributor.

1.4 Product Appearance

Figure 1-1 Appearance

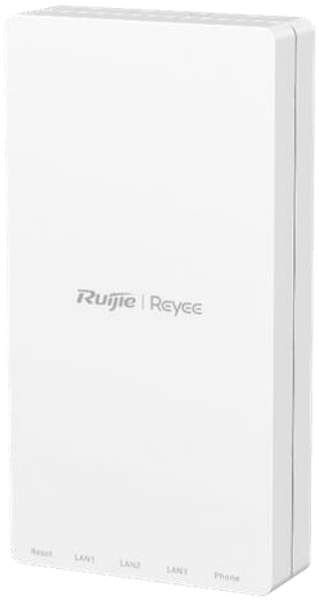

1.4.2 Front Panel

Figure 1-2 Front Panel



Table 1-2 Components on the Front Panel

No.	Component	Description
1	Reset button	Press the button for shorter than 2s: Restart the AP. Press the button for longer than 2s and shorter than 5s: No operation. Press the button for longer than 5s: Restore to factory settings.
2	3 x LAN ports (RJ45)	10/100/1000Base-T Ethernet ports for connecting wired terminals
3	VoIP port (RJ11)	VoIP port for connecting a VoIP cable

Figure 1-3 LEDs



Table 1-3 LEDs

No.	LED	Description
1	System status LED	Off: The AP is not powered on.
		Solid blue: The AP is working properly without alarms.
		Fast blinking blue (8 Hz). The possible causes are as follows: ● The AP start fails. ● The AP restart fails.
		Blinking blue twice. The possible causes are as follows: ● Factory settings are restored. ● Version upgrade is performed. **Note** In this LED state, do not power off the AP.
		Solid blue (one long blink and three short blinks): The main program is lost.
		Blinking blue (long on and short off): The AP is not added on the cloud.
		Fast blinking blue for 3s (8 Hz) and off for 3s: The AP is being searched for on Ruijie Reyee App.
2	Optical port LED	Off: The AP is not powered on.

No.	LED	Description
		Blinking yellow: The ONU is registering.
		Blinking red: The ONU registration fails.
		Blinking green: The optical port is connected and data is being transmitted.
		Solid green: The optical port is connected but no data is being transmitted.

1.4.3 Rear Panel

Figure 1-4 Rear Panel



Table 1-4 Ports on the Rear Panel

No.	Port	Description
1	SC port	1000Base-X SC optical port for connecting an optical cable
2	DC power connector	Power connector for DC power supply of 12 V/1.5 A
3	Label	The label is located on the back of the device

1.5 Technical Specifications

Table 1-5 Technical Specifications

Radio Design	2.4 GHz and 5 GHz: dual-radio dual-stream
Wi-Fi Standards	IEEE 802.11ac Wave 2 and Wave 1 and IEEE 802.11a/b/g/n
Operating Frequency Bands	IEEE 802.11b/g/n: 2.4 GHz to 2.4835 GHz IEEE 802.11a/n/ac: 5 GHz: 5.150 GHz to 5.350 GHz, 5.470 GHz to 5.725 GHz, 5.725 GHz to 5.850 GHz **Note** The operating bands vary in different countries.
Antenna Type	Built-in omnidirectional onboard antenna (basic gain: 2.0 dBi)
Spatial Streams	2.4 GHz: 2x2 MIMO 5 GHz: 2x2 MIMO
Max. Wi-Fi Speed	2.4 GHz: 300 Mbps 5 GHz: 866.7 Mbps Combined: 1166.7 Mbps
Modulation	DBPSK/DQPSK/CCK(DSSS)/BPSK/QPSK/16QAM/64QAM/256QAM
Receiver Sensitivity	IEEE 11b: –91 dBm (1 Mbps), –88 dBm (5 Mbps), –85 dBm (11 Mbps) IEEE 11a/g: –89 dBm (6 Mbps), –80 dBm (24 Mbps), –76 dBm (36 Mbps), –71 dBm (54 Mbps) IEEE 11n: –83 dBm (MCS0), –65 dBm (MCS7), –83 dBm (MCS8), –65 dBm (MCS15) IEEE 11ac HT20: –83 dBm (MCS0), –57 dBm (MCS9) IEEE 11ac HT40: –79 dBm (MCS0), –57 dBm (MCS9) IEEE 11ac HT80: –76 dBm (MCS0), –51 dBm (MCS9)
Transmit Power	Frequency bands using and the max EIRP. **Note** Country specific restrictions apply. ● European Union & United Kingdom: ○ 2400 to 2483.5 MHz, EIRP ≤ 20 dBm ○ 5150 to 5350 MHz, EIRP ≤ 23 dBm ○ 5470 to 5725 MHZ, EIRP ≤ 30 dBm ● United States: ○ 2400 to 2483.5 MHz, max output power ≤ 30 dBm & EIRP ≤ 36 dBm

	○ 5150 to 5250 MHz, max output power ≤ 30 dBm & EIRP ≤ 36 dBm ○ 5250 to 5350 MHz, max output power ≤ 24 dBm & EIRP ≤ 30 dBm ○ 5470 to 5725 MHz, max output power ≤ 24 dBm & EIRP ≤ 30 dBm ○ 5725 to 5825 MHz, max output power ≤ 30 dBm & EIRP ≤ 36 dBm ● Myanmar: ○ 2400 to 2483.5 MHz, EIRP ≤ 23 dBm ○ 5725 to 5825 MHz, EIRP ≤ 30 dBm ● Thailand: ○ 2400 to 2483.5 MHz, EIRP ≤ 20 dBm ○ 5150 to 5350 MHz, EIRP ≤ 23 dBm ○ 5470 to 5725 MHz, EIRP ≤ 30 dBm ○ 5725 to 5825 MHz, EIRP ≤ 30 dBm ● Indonesia: ○ 2400 to 2483.5 MHz, EIRP ≤ 27 dBm ○ 5150 to 5350 MHz, EIRP ≤ 23 dBm ○ 5725 to 5825 MHz, EIRP ≤ 23 dBm ● Egypt: ○ 2400 to 2483.5 MHz, EIRP ≤ 20 dBm ○ 5150 to 5350 MHz, EIRP ≤ 23 dBm
Power Step	1 dBm
ONU Power Range	The power range of the SC optical port of the ONU is from –8 dBm to –28 dBm. If the power is beyond this range, the AP may be abnormal or damaged. **Caution** The SC optical port of the ONU should not be directly connected to the PON port of the OLT. According to the power indicator, when short-distance single-mode fibers are used, a linear optical attenuator or optical splitter should be added on the link to avoid damage to the AP.
Dimensions (W x D x H)	165 mm x 86 mm x 29 mm (6.50 in. x 3.39 in. x 1.14 in.) The height is the edge height of the AP, excluding the mounting bracket and SMA connectors.
Weight	AP: 0.236 kg (0.520 lbs.)
Service Ports	Bottom: 3 x 10/100/1000Base-T Ethernet downlink ports 1 x VoIP port for connecting a VoIP cable Rear: 1 x 1000Base-X SC optical port for connecting an optical cable 1 x DC power connector for connecting the power supply

Management Port	N/A
Status LED	1 x system status LED, 1 x optical port LED
Power Supply Options	12 V/1.5 A DC power adapter (normal operation)
Max. Power Consumption	≤ 12.95 W
Bluetooth 5.0	Not supported.
Environment	Operating temperature: 0°C to 40°C (32°F to 104°F)
	Storage temperature: –40°C to +70°C (–40°F to +158°F)
	Operating humidity: 5% RH to 95% RH (non-condensing)
	Storage humidity: 5% RH to 95% RH (non-condensing)
Installation Method	Wall mounting using screws
Certification	CE
MTBF	> 400,000 hours

1.6 Technical Specifications of Power Supply

The RG-APF1250 supports DC power supply of 12 V/1.5 A using a DC power adapter. The following table lists the adapter specifications.

Inner Diameter	Outer Diameter	Depth	Conductor Resistance	Insulation Resistance	Voltage Resistance (Insulation and Conductor)	Polarity
2.00+/– 0.05 mm	6.30+/– 0.20 mm	9 mm	30 mΩ	100 MΩ	500 V	Center positive (reverse not supported)

1.7 Cooling

The RG-APF1250 adopts a fanless design and can be installed on a wall.

2 Preparing for Installation

2.1 Safety Guidelines

The wall-mounted RG-APF1250 functions as an important intermediate node for network connection and determines whether the connected subnet can operate properly.

The following safety guidelines must be followed during installation and use:

- Do not place the AP in a wet position and keep the AP away from liquid.
- Keep the AP away from heat sources.
- Wear an anti-ESD wrist strap during installation and maintenance.
- Do not wear loose clothing. Tighten your belt, scarf, and sleeves to prevent clothing from snagging on components and causing damage.
- Keep tools and components away from walking areas.
- You are advised to use an uninterrupted power supply (UPS) to avoid interference caused by power failures.

2.2 Site Requirements

The wall-mounted RG-APF1250 must be installed indoors for normal operation and prolonged service life. The installation site must meet the following requirements.

2.2.1 Temperature and Humidity

To ensure normal operation and prolonged service life of the AP, maintain appropriate temperature and humidity conditions at the installation site. In an environment with a high relative humidity, insulating materials are prone to poor insulation or even electricity leakage. In an environment with a low relative humidity, insulating gaskets may shrink, resulting in screw loosening. In a dry environment, static electricity is more likely to occur, posing a risk to the internal circuits of the AP. A high temperature can accelerate the aging process of insulation materials, greatly reducing the availability of the AP and severely affecting its service life. The following table lists the temperature and humidity requirements.

Operating Temperature	Operating Humidity
0°C to 40°C (32°F to 104°F)	5% RH to 95% RH (non-condensing)

2.2.2 Cleanliness

Dust poses a major threat to the AP. The indoor dust can cause electrostatic adhesion when falling on the AP, causing poor contact. Such electrostatic adhesion occurs more easily when the indoor relative humidity is low, not only affecting the service life of the AP, but also causing communication failure easily.

The following table lists the requirements for dust concentration and particle size indoors.

Max. Diameter (μm)	0.5	1	3	5
Max. Concentration (Number of Particles/m^3)	1.4 x 10^7	7 x 10^5	2.4 x 10^5	1.3 x 10^5

Apart from dust, harmful gases such as the salt, acid, and sulfide in the air at the installation site must meet strict requirements. These gases accelerate metal corrosion and component aging. The following table lists the limits for harmful gases including SO_2, H_2S, NO_2, NH_3, and Cl_2 at the installation site.

Gas	**Average (mg/m^3)**	**Maximum (mg/m^3)**
Sulfur dioxide (SO_2)	0.2	1.5
Hydrogen sulfide (H_2S)	0.006	0.03
Nitrogen dioxide (NO_2)	0.04	0.15
Ammonia gas (NH_3)	0.05	0.15
Chlorine gas (Cl_2)	0.01	0.3

2.2.3 ESD Damage Prevention

The wall-mounted RG-APF1250 applies ESD damage prevention in the circuit design. However, excessive static electricity may still damage the PCB. ESD on the communication network connected to the AP mainly originates from two sources:

- Outdoor high-voltage power lines, lightning, and other external electric fields
- Internal systems such as indoor flooring materials and the structure of the AP

To prevent damage caused by static electricity, pay attention to the following:

- Keep the site as dust-free as possible.
- Maintain appropriate temperature and humidity conditions.

2.2.4 Anti-Interference

Electromagnetic and current interferences should be prevented. The following anti-interference requirements must be met:

- Take interference prevention measures for the power supply system.
- Keep the AP far away from the grounding system or lightning protection grounding system of the power facility.
- Keep the AP far away from high-frequency current equipment such as high-power radio transmitting stations and radar launchers.

2.2.5 Installation Site

When the AP is installed on the wall, the following conditions must be met:

- The wall surface must be smooth and clean.

- Ethernet cable connectivity is normal.

2.3 Tools

Common Tools	Phillips screwdriver, cables, fastening bolts, diagonal pliers, and cable ties
Special Tools	Wire stripper, crimper, RJ45 connector crimping plier, wire cutter, and anti-ESD gloves
Meters	Multimeter and bit error rate tester (BERT)

Note

The RG-APF1250 is delivered without a toolkit. Prepare the preceding tools by yourself.

3 Installing the AP

Caution

Before installing the AP, ensure that the guidelines and requirements in Chapter 2 have been met.

3.1 Before You Begin

Before installing the RG-APF1250, carefully plan and arrange the installation location, networking mode, power supply, and cabling. Confirm the following requirements before installation:

- The installation site meets the temperature and humidity requirements of the AP.
- The power supply and required current are available at the installation site.
- The selected power supply modules meet the system power requirements.
- The installation site meets the cabling requirements of the AP.
- The installation site meets the site requirements of the AP.
- The customized AP meets the client-specific requirements.

3.2 Safety Precautions During Installation

To ensure the normal operation and prolonged service life of the AP, observe the following safety precautions:

- Do not power on the AP during installation.
- Place the AP in a well-ventilated environment.
- Do not expose the AP to high temperatures.
- Keep the AP away from high-voltage power cables.
- Install the AP indoors.
- Do not expose the AP to a thunderstorm or strong electric field.
- Keep the AP clean and dust-free.
- Cut off the power supply before cleaning the AP.
- Do not wipe the AP with a damp cloth.
- Do not wash the AP with liquid.
- Do not open the enclosure when the AP is working.
- Secure the AP properly.

3.3 Installing the AP

(1) Drill two screw holes on the wall and leave 60 mm (2.36 in.) between the two holes.

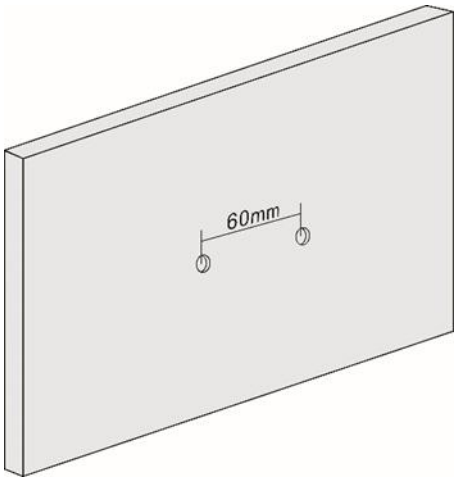

(2) Adjust the position of the mounting bracket on the wall, and then fix it to the wall using M4 x 20 mm Phillips pan head screws.

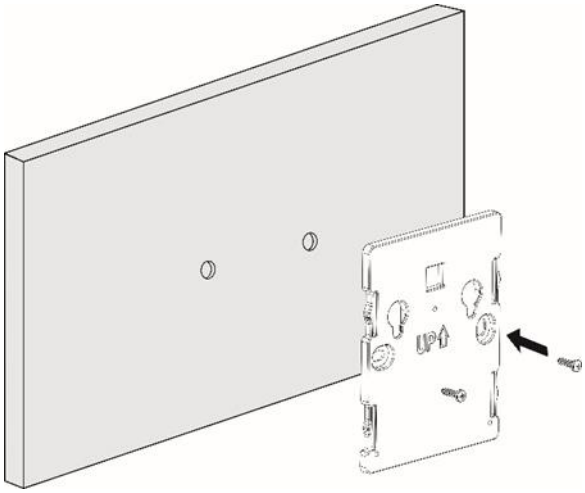

(3) Connect the optical cable to the 1000M SC optical port on the rear panel of the AP, and connect the DC power cord to the DC power connector on the rear panel of the AP.

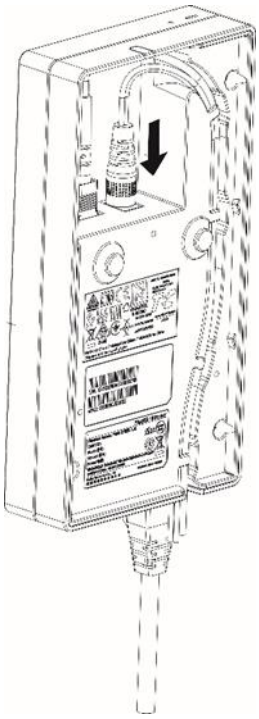

(4) Align the hangers at the rear panel of the AP with the mounting holes on the mounting bracket, and push the hangers downward along the guide rails to secure the AP.

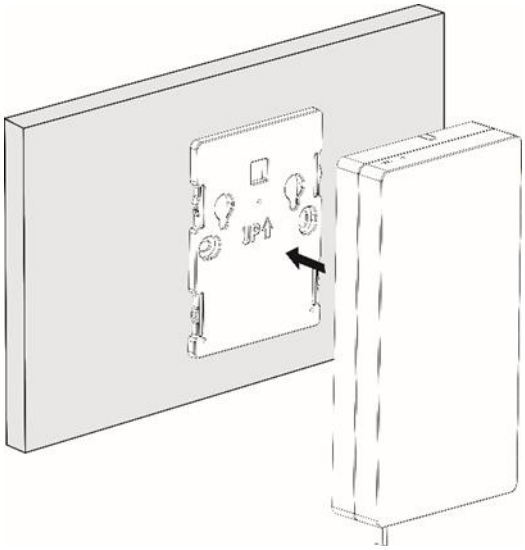

3.4 Bundling Cables

Precautions

- Bundle the cable in a visually pleasing way.
- Make sure that the twisted pairs at the connectors have natural bends or bends of large radius.
- Do not bundle the twisted pairs too tightly, as this may reduce the cable service life and transmission performance.

Bundling Procedure

(1) Bundle the drooping part of the twisted pairs and place the bundle as near the WAN/PoE ports as possible.

(2) Fasten the twisted pairs to the cable trough of the mounting bracket.

(3) Route the twisted pairs under the AP and run them in a straight line.

3.5 Verifying Installation

- Verify that the AP is securely fastened.
- Verify that the twisted pair type matches the port type.
- Verify that the cables are properly bundled.

4 Commissioning

4.1 Setting Up the Configuration Environment

Power the AP using an adapter. After setting up the environment, ensure that the adapter is in good contact and meets safety requirements.

4.2 Powering on the AP

4.2.1 Checklist Before Power-on

- The power supply capability of the adapter is normal.
- The optical cable, Ethernet cable, and VoIP cable are properly connected.

4.2.2 Checklist After Power-on

- Verify the LED status.
- After the AP is powered on, check whether the SSID can be searched by a mobile phone or other wireless clients.

4.3 Rectifying Power Supply Failures

For the wall-mounted RG-APF1250, you can determine whether the power system is faulty based on the status of the LEDs on the front panel. For details about LED status, see Table 1-3. If an exception occurs, check the following items:

- Check whether the AP is properly powered.
- Check whether the Ethernet cable is properly connected.

Note

If the AP cannot start after all the preceding items are verified, contact local distributors or technical support.

5 Monitoring and Maintenance

5.1 Monitoring

When the RG-APF1250 is operating, you can monitor the AP running status by observing the LED.

5.2 Maintenance

If a fault occurs, contact Ruijie technical support.

6 Troubleshooting

6.1 General Troubleshooting Flowchart

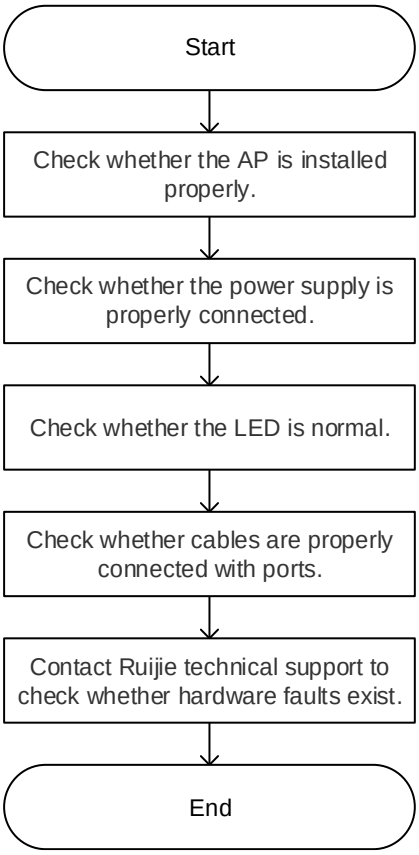

6.2 Common Faults

6.2.1 System Status LED Is Off After the AP Is Powered On

Verify that the adapter connected to the DC power connector is working properly, and check whether the Ethernet cable is connected properly.

6.2.2 After an Ethernet Cable is Connected, the Ethernet Port Cannot Be Used

Verify that the adapter connected to the DC power connector is working properly. Then verify that the Ethernet cable is capable of providing the required data rate and is properly connected.

6.2.3 A Client Cannot Discover the AP

(1) Verify that the AP is properly powered.

(2) Verify that the Ethernet port is correctly connected.

(3) Verify that the AP is correctly configured.

(4) Move the client closer to the AP.

7 Appendix

7.1 Connectors and Media

1000BASE-T/100BASE-TX/10BASE-T Port

The 1000BASE-T/100BASE-TX/10BASE-T port is a 10/100/1000 Mbps auto-negotiation port that supports auto MDI/MDIX crossover.

Compliant with IEEE 802.3ab, 1000BASE-T requires Category 5e 100-ohm UTP or STP (STP is recommended) with a maximum connection distance of 100 meters (328 ft.).

The 1000BASE-T port requires all four pairs of wires to be connected for data transmission. Figure 7-1 shows the four pairs of wires for the 1000BASE-T port.

Figure 7-1 1000BASE-T Twisted Pair Connections

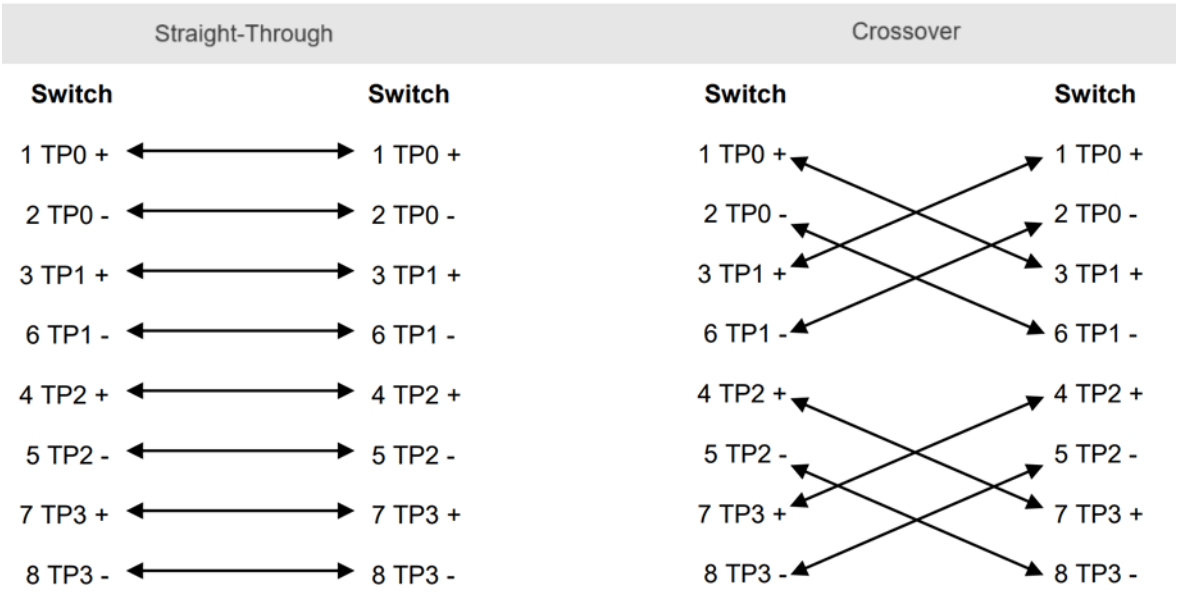

100BASE-TX/10BASE-T can be interconnected using cables of the preceding specifications. For 10 Mbps, the 100BASE-TX/10BASE-T port can be connected using 100-ohm Category 3, Category 4, and Category 5 cables. For 100 Mbps, the 100BASE-TX/10BASE-T port can be connected using 100-ohm Category 5 cables with a maximum connection distance of 100 meters. Table 7-1 lists 100BASE-TX/10BASE-T pin assignments.

Table 7-1 100BASE-TX/10BASE-T Pin Assignments

Pin	Socket	Plug
1	Input Receive Data+	Output Transmit Data+
2	Input Receive Data-	Output Transmit Data-
3	Output Transmit Data+	Input Receive Data+
6	Output Transmit Data-	Input Receive Data-

Pin	Socket	Plug
4, 5, 7, 8	Not Used	Not Used

Figure 7-2 shows the wiring of straight-through and crossover cables for 100BASE-TX/10BASE-T.

Figure 7-2 100BASE-TX/10BASE-T Twisted Pair Connections

